RTC-8030

SERIES II

Rough Terrain Crane
30-ton *(27.2 mt)*

- 30-ton at 10 ft *(3.05 m)* radius
- 143 ft *(43.62 m)* maximum tip height
- 55,526 lb *(25 186 kg)* gross vehicle weight
- 29 ft to 91 ft *(8.84 m-27.84 m)* full power, four-section boom with quick reeve boom head
- Optional two-piece (bi-fold) lattice fly, stowable offsettable to 2°, 20° and 40°
- Microguard 434 rated capacity limiter
- Off-highway 152 hp *(113 kW)* Cummins engine
- Spicer six speed transmission
- Pilot-operated hydraulic controls
- 25 mph *(40.19 km/h)* travel speed
- 11 ft 5 in *(3.48 m)* wheel base

Link-Belt
CRANES

RTC-8030 SERIES II

Rough Terrain Crane

Loaded with proven innovations for awesome performance, control & reliability

Engine hood design provides easy access for maintenance.

A-max extends only the inner-mid section of the boom for substantially increased capacities for in-close, maximum capacity lifts.

The RTC-8030 Series II is a time-honored combination of reliability & capacity performance!

- **Cummins 6BT 5.9 L Diesel Engine** with 152 hp *(113 kW)* provides 414 lb-ft *(561 Nm)* of torque
- **Two automotive-style batteries** linked in parallel provide 700 cold cranking amps each for cold weather starting
- **4- Link rear suspension** greatly reduces the inherent bouncing at speed
- **Flat deck carrier** ensures that the crane is very user friendly when entering and exiting the cab
- **Rugged, lightweight aluminum pontoons**
- **Hydraulic disc brakes** for both service brakes and parking brake
- **Metri-Pak wire harnesses** have sealed relays and connectors throughout for outstanding long-term reliability. All wires have flame retardant polyethylene insulation, resulting in a higher heat resistant wiring system.

4-section full power boom with attachment flexibility

- **Full power 29ft to 91ft** *(8.84-27.84m)* four-section boom with two extend modes: A-max and fully synchronized
- Features the **"Boss," Link-Belt's patented boom design** of high strength angle cords and high formability sidewall embossments.
- **Optional 25ft** *(7.62m)* one piece stowable lattice fly. Maximum tip height is 124ft *(37.99m)*
- **Optional 27ft** *(8.23m)* one piece lattice fly, stowable, offsetable to 2°, 20°. and 40°. Maximum tip height is 126ft *(38.51m)*
- **Optional 27ft-44ft** *(8.23-13.41m)* two piece bi-fold lattice fly, stowable, offsetable to 2°, 20°. and 40°. Maximum tip height is 143ft *(43.62m)*

Operator cab features

- **Large front window** for excellent visibility
- **Tinted glass**
- **Sliding right side and rear windows** and swing-up **top window** provide excellent ventilation
- **Integral rated capacity limiter** aids the operator in safe and efficient operation by continuously monitoring boom length, boom angle, head height, radius of load, machine configuration, allowed load and percent of allowed load.

Powerful hydraulics

- For greater productivity and control, the three pump system allows positive precise control
- Gear motor hydraulic hoist system delivers dependable hoisting. Matched sized main (front) and auxiliary (rear) winches provide maximum available line pulls of 11,948 lbs *(5 419.5kg)* and maximum line speeds of 452 fpm *(138 m/min)* on grooved drums.

Job site maneuverability

- **CALC** — Outrigger beams have three lifting stages (retracted, intermediate and fully extended) providing lifting capacities in confined areas.
- **Steering modes** are chosen and performed with the steering wheel and include independent front steer, four wheel steer, and "crab" steering.

Invest in a legacy of outstanding customer support

- **Distributor support personnel -** Factory-trained technicians are specifically tested to establish proficiency in all aspects of crane diagnostics and repair.
- **Factory product support team -** Supporting your trained distributor personnel are experienced factory advisors with comprehensive records and technical libraries that stand ready to resolve any crane service issue.
- **Parts Distribution Center -** 72,000 sq. ft. Parts Distribution Center averages an over-90% parts availability rate.
- **eParts -** Link-Belt's online computer system links our distributors worldwide so customers can order genuine Link-Belt parts 24 hours a day, 7 days a week.
- **Link-Belt Preferred -** Link-Belt's customer web site provides instant access to a comprehensive library of all parts, service and operator manuals plus other technical and sales information.

Link-Belt Preferred

® Link-Belt is a registered trademark. Copyright 2005. All rights reserved. We are constantly improving our products and therefore reserve the right to change designs and specifications.

Litho in U.S.A. 3/05 #4306 (supersedes #4279)

Specifications

Telescopic Boom Rough Terrain Crane

RTC–8030 30–ton *(27.2 metric tons)*

Series II

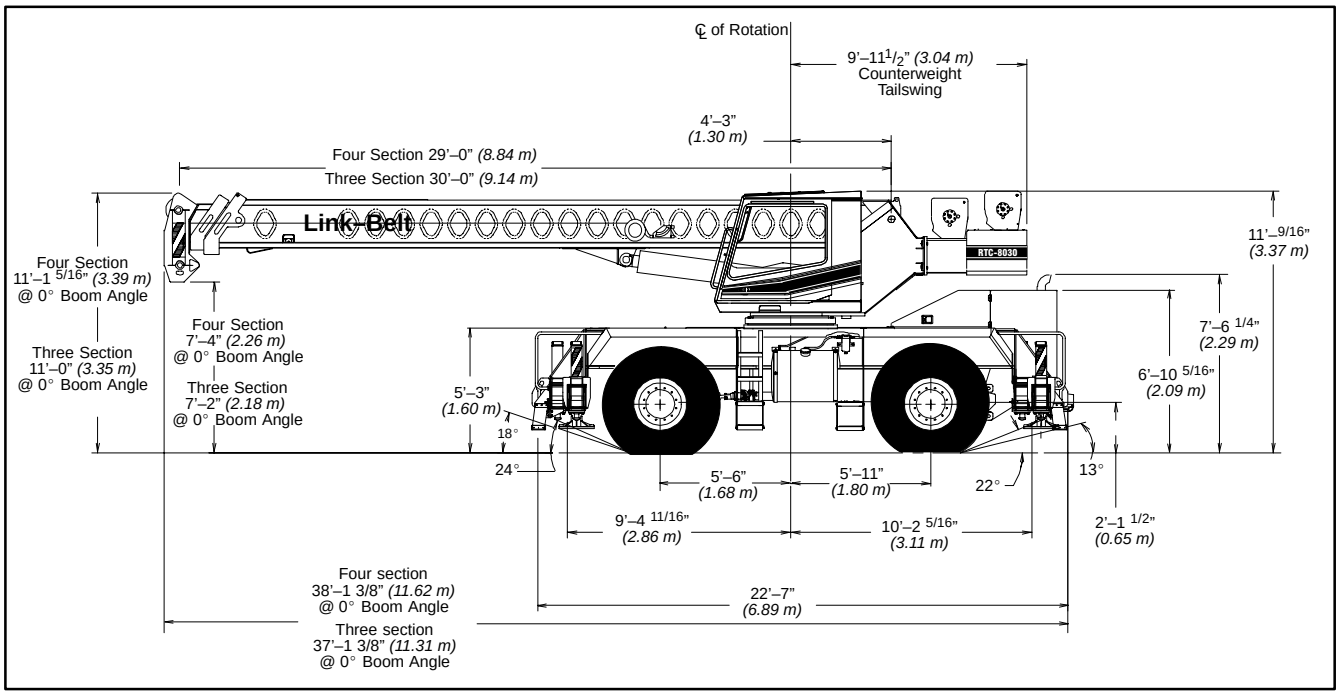

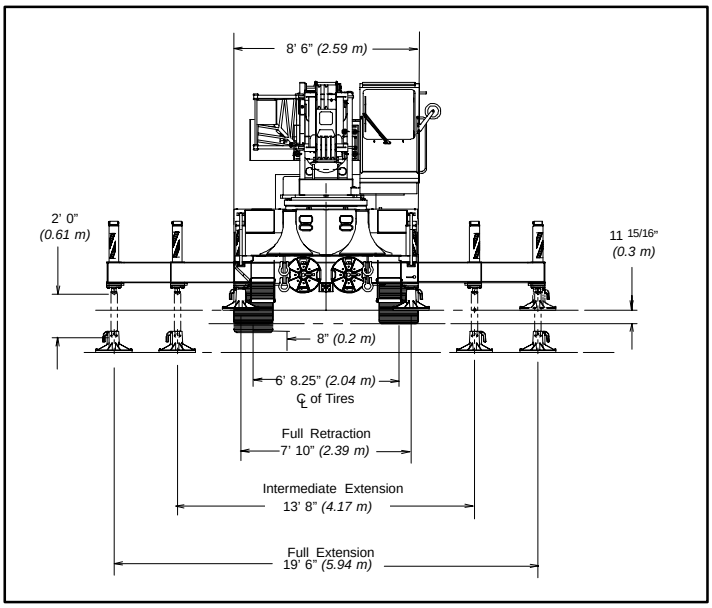

General Dimensions	feet	*meters*
Tailswing of Counterweight	9' 11.5"	*3.04*
Turning radius (4–wheel steer centerline of tires)	17' 1"	*5.21*
Turning radius (2–wheel steer centerline of tires)	31" 3"	*9.55*
Turning radius (4–wheel steer outside front carrier corner)	20' 8.5"	*6.31*
Turning radius (2–wheel steer outside front carrier corner)	35'	*10.67*

Upper Structure

■ Boom

Patented Design

- Boom side plates have diamond shaped impressions for superior strength to weight ratio and 100,000 p.s.i. *(689.5 MPa)* steel angle chords for lateral stiffness.
- Boom telescope sections are supported by top, bottom and adjustable side wear shoes to prevent metal to metal contact.

Standard Boom

- 30' – 78' *(9.14 – 23.78 m)* three–section full power boom.
- Mechanical Boom Angle Indicator

Optional Boom

- 29' – 91' 4" *(8.84 – 27.84 m)* four–section full power boom. Two mode boom extension:
  - Basic mode (or mode 'B') is the full power, synchronized mode of telescoping all sections proportionally.
  - The exclusive ***A–max*** mode (or mode 'A') extends only the inner mid–section to 49' 9" *(15.16 m)* offering increased capacities for in–close, maximum capacity picks.
  - Mechanical Boom Angle Indicator

Boom Head

- Four 10.63" *(0.27 m)* root diameter steel sheaves handle up to eight parts of wire rope.
- Quick reeve design.
- Rope dead end lugs provided on each side of boom head.
- Easily removable wire rope guards.
- Fly pinning alignment tool.

Boom Elevation

- One Link–Belt designed hydraulic cylinder with holding valve and bushing in each end.
- Hand control for controlling boom elevation from –3 to 78°.

Optional Auxiliary Lifting Sheave

- Single 10.63" *(0.27 m)* root diameter steel sheave with removable wire rope guard.
- Use with one or two parts of line off the optional front winch.
- Does not affect erection of fly or use of main head sheaves for multiple reeving.

Optional

- 30–ton *(27.2 mt)* 3–sheave, quick reeve hook block.
- 8.5–ton *(7.7 mt)* hook ball.
- Boom floodlight

■ Fly

Optional

- 25' *(7.62 m)* fixed stowable one–piece lattice type.
- 27' *(8.23 m)* offsettable stowable one–piece lattice type with lugs to allow for addition of second section. Can be offset 2°, 20° or 40°.
- 27' – 44' *(8.23 to 13.41 m)* offsettable stowable two–piece lattice type. Can be offset 2°, 20° or 40°.

■ Cab and Controls

Environmental Cab

- Isolated from sound and vibration by a neoprene seal.
- Six–way adjustable operator's seat with retractable seat belt.
- Four–way adjustable tilting–telescoping and locking steering wheel.
- All windows are tinted and tempered safety glass.
- Slide by door opens to 36" *(0.91 m)* width.
- Sliding rear and right side windows and swing up roof windows for maximum visibility and ventilation.
- Engine dependent warm–water heater with defroster.
- Audible swing alarm.
- Backup alarm
- 12–volt accessory outlet
- Electric windshield wiper
- Top hatch window wiper
- Fire extinguisher
- Warning horn
- Travel lights
- Sun screen
- Mirrors
- Cup holder
- Circulating fan

Optional

- Amber strobe light
- Emergency steering system
- Amber rotating beacon

Controls

Hydraulic controls (single–axis type) for:

- Main winch
- Optional auxiliary winch
- Drum rotation indicators
- Boom hoist
- Swing

Foot controls for:

- Boom telescope
- Swing brake
- Engine throttle with throttle lock
- Outrigger controls and sight level bubble also provided in upper cab.

Cab Instrumentation

Dash mounted gauges for:

- Hydraulic oil temperature
- Tachometer
- Convertor temperature
- Oil pressure
- Water temperature
- Voltmeter
- Fuel
- Audio/Visual warning system

■ Rated Capacity Limiter

- **Microguard 434** Graphic audio–visual warning system built into dash with anti–two block and function limiters.

Operating data available includes:

- Machine configuration.
- Boom length
- Head height
- Allowed load
- % of allowed load
- Boom angle
- Radius of load
- Actual load

Presettable alarms include:

- Maximum and minimum boom angles.
- Maximum tip height.
- Maximum boom length.
- Swing left/right positions.
- Operator defined area alarm is standard.
- Anti–two block weight designed for quick reeve of hookblock.

Optional

- **Internal RCL light bar:** Visually informs operator when crane is approaching maximum load capacity with a series of three lights; green, yellow and red.
- **External RCL light bar:** Visually informs ground crew when crane is approaching maximum load capacity kickouts and presettable alarms with a series of three lights; green, yellow and red.

■ Swing

- Bi–directional hydraulic swing motor mounted to a planetary reducer for 360° continuous smooth swing at 2.8 r.p.m.
- **Swing park brake** – 360° mechanical disc brake mounted on the speed reducer. Mechanically controlled from the control console.
- **Swing brake** – 360°, foot operated, spring released disc brake mounted on the speed reducer.
- **Swing lock** – Standard; two position travel lock operated from the operator's cab.
- **Counterweight** – Bolted to upper structure frame.
  - Three–Section – 7,800 lbs. *(3 538 kg)*.
  - Four–Section – 9,300 lbs. *(4 218 kg).*

Optional

- 360° swing lock (meets New York City requirements).

■ Hydraulic System

Main Pump

- 2–section gear–type pump.
- Combined pump capacity 75 gpm *(284 lpm)*
- Mounted on transmission converter, powered by engine.
- Pump operates at 3,500 p.s.i. *(24.1 MPa)* maximum system pressure.
- O–Ring Face Seal (ORFS) technology throughout with hydraulic oil cooler.

Telescope / Outrigger / Steering Pump –

- Single gear–type pump, 18 gpm *(83.2 lpm)* maximum. Mounted on engine, powered by engine through a direct mechanical drive.
- Pump operates at 3,000 p.s.i. *(20.7 MPa)* maximum system pressure.

Reservoir

- 80 gal. *(303 L)* capacity. Diffuser for deaeration.

Filtration:

- Two 10–micron filters located outside hydraulic reservoir.
- Accessible for easy replacement.

(Continued on next page)

(Upper Structure continued)

Control Valves:
- Five separate, pilot operated control valves allow simultaneous operation of all crane functions.

Optional
- Pump disconnect.

■ Load Hoist System

Standard
- 2M rear winch with grooved lagging.
- Two–speed motor and automatic brake.
- Power up/down mode of operation.
- Controls for future addition of auxiliary winch.
- Bi–directional gear–type hydraulic motor, driven through a planetary reduction unit for positive operator control under all load conditions.
- Asynchronous parallel double crossover grooved drums minimize rope harmonic motion.
- 6 x 19 IWRC wire rope.

Line Pulls and Speeds
- Maximum line pull 11,948 lbs. *(5 420 kg)* and maximum line speed of 452 f.p.m. *(138 m/min)* on standard 10.63" *(0.27 m)* root diameter grooved drum.

Optional
- 2M front winch with two–speed motor and automatic brake, power up/down mode of operation.
- Hoist drum cable followers.
- Third wrap indicators.
- Rotation resistant rope.

Carrier

■ Type
- 8' 6" *(2.59 m)* wide, 137" *(3.48 m)* wheelbase.
- 4 x 4 x 4 – (4–wheel steer, 4–wheel drive) *For rough terrain with limited turning area.*

Frame
- 100,000 p.s.i. *(689.5 MPa)* steel, double walled construction.
- Integral 100,000 p.s.i. *(689.5 MPa)* steel outrigger boxes.

Standard Carrier Equipment
- Two front, two rear and two mid–point carrier steps.
- Non–slip safety strips on carrier deck.
- Two deep front storage units.
- Fenders.
- Pontoon storage.
- Full lighting package.
- Front towing shackles.
- Hook block tie back.

Optional
- Front and rear mounted pintle hook.

■ Engine

Engine	Cummins 6BT 5.9 L
Cylinders – cycle	6 – 4
Bore	4.02 in. *(102.11 mm)*
Stroke	4.72 in. *(119.89 mm)*
Displacement	359 cu. in. *(5 883 cm^3)*
Maximum brake hp	152 @ 2,500 rpm
Peak torque (ft. lb.)	414 @ 1,500 rpm
Electric system	12 volt
Starting system	12 volt
Fuel capacity	75 gallons *(283.9 L)*
Alternator	130 amps
Crankcase capacity (total system)	17.3 qts. *(16.37 L)*
• Water/fuel separator on engine • 110–volt block heater • Ether injection package – optional	

■ Transmission
- Clark three–speed two range power shift transmission.
- Six speeds forward and two reverse
- Front axle disconnect for two or four–wheel drive.

■ Axles
- Heavy duty planetary drive/steer type.
- Front axle disconnect.

■ Suspension

Front Axle
- Rigid mounted to frame.

Rear Axle
- Fully independent 4–Link.
- Automatic axle oscillation lockout cylinders engage when upper structure rotates past 2.5° of centerline.

Optional
- Rear Hydro–gas Ride™

■ Steering
- Hydraulic two–wheel, four–wheel and "crab" steering.
- Modes selected by toggle switch on dash.
- All modes fully controlled by steering wheel.

Optional
- Rear steer indicator

■ Tires

Front and Rear
- Standard 20.5R25 (24–PR) Loader type.

Optional
- Spare tires and rims

■ Brakes

Service
- Fully hydraulic disc–type brakes at each wheel end with independent front and rear system.

Parking/Emergency
- Spring applied, hydraulic released, cab controlled, disc–type integral to the transmission.

■ Outriggers
- Three position operation capability.
- Four hydraulic, telescoping beam and jack outriggers.
- Vertical jack cylinders equipped with integral holding valve.
- Beams extend to 19' 6" *(5.94 m)* centerline–to–centerline and retract to within 8' 6" *(2.59 m)* overall width.
- Equipped with stowable, lightweight 18.5" *(0.47 m)* diameter aluminum floats.
- Dash mounted controls and sight level bubble located in upper structure cab.

Confined Area Lifting Capacities (CALC™) System
- The crane is operational in one of the three outriggers positions and operational in confined areas in two positions (intermediate and full retraction. The three outrigger positions are:
- Full extension – 21.63' *(6.42 m)*
- Intermediate position – 13' 8" *(4.17 m)*.
- Full retraction – 7' 10" *(2.39 m)*.
- Capacities are available with the outrigger beams in the intermediate and full retraction positions.
- When the outrigger position levers (located on the outrigger beams) are engaged, the operator can set the crane in the intermediate or full retraction outrigger position without having to leave the cab.

■ Travel Speeds and Gradability

Tires	20.5R25
Maximum Speed	24.8 *(39.9 km/h)*
Gradability at stall	198.9%
Maximum Tractive Effort at Stall	46,769 lbs. *(21 214 kg)*
Gradability at 1.0 mph (1.6 km/hr)	76.8%
Maximum Tractive Effort at 1.0 mph. (1.6 km/hr)	32,214 lbs. @ 1,500 rpm *(14 612 kg)*

■ Axle Loads

Base machine with standard 30 to 78' *(9.14 – 23.78 m)* three–section boom, 2M main winch with 2–speed hoisting and power up/down, 450'. *(137 m)* of 5/8" in. *(19 mm)* wire rope. 4x4x4 carrier with Cummins 6BT5.9 engine, 20.5R25 tires 75 gals. *(283.91 L)* of fuel, tow shackles and hook block tie-back.	G.V.W.[1]		Upper facing front				Upper facing rear			
			Front axle		Rear axle		Front axle		Rear axle	
	lbs.	*kg.*	lbs.	*kg.*	lbs.	*kg.*	lbs.	*kg.*	lbs.	*kg.*
	52,098	*23 631*	25,907	*11 751*	26,191	*11 880*	23,338	*10 586*	28,760	*13 045*
Pintle hook, front and rear	26	*12*	13	*6*	13	*6*	13	*6*	13	*6*
Cold weather starting aids – ether injector	6	*3*	0	*0*	6	*3*	0	*0*	6	*3*
Pump disconnect	28	*13*	6	*3*	21	*10*	6	*3*	21	*10*
Air conditioning in operator's cab	215	*98*	36	*16*	179	*81*	187	*85*	28	*13*
Emergency steer system	5	*2*	3	*1*	2	*1*	2	*1*	3	*1*
360 degree sector gear–type house lock	60	*27*	29	*13*	31	*14*	33	*15*	27	*12*
Winch roller – rear winch	76	*34*	–14	*–6*	90	*41*	93	*42*	–17	*–8*
Power up/down winch with 450 ft. of rope –front	361	*164*	–28	*–13*	389	*176*	402	*182*	–41	*–19*
Winch roller – front winch	76	*36*	1	*0*	75	*34*	78	*35*	–2	*–1*
Remove 450' *(137 m)* of wire rope from rear winch	–320	*–145*	82	*37*	–402	*–182*	–413	*–187*	94	*43*
Remove 450' *(137 m)* of wire rope from front winch	–320	*–145*	21	*10*	–340	*–154*	–352	*–160*	33	*15*
Replace three–section boom with four section boom	3,428	*1 555*	1,654	*750*	1,774	*805*	1,900	*862*	1528	*693*
30–ton *(27.2 mt)* capacity hook block to carrier storage box	670	*304*	943	*428*	–273	*–124*	–248	*–112*	918	*416*
8.5–ton *(7.7 mt)* capacity hook block to carrier storage box	360	*163*	506	*230*	–146	*–66*	–133	*–60*	493	*225*
Three–Section Boom										
Fly brackets to boom base sections for fly options	140	*64*	213	*97*	–72	*–33*	–67	*–30*	208	*94*
25' *(7.62 m)* fixed fly (stowed)	535	*243*	860	*390*	–325	*–147*	–306	*–139*	841	*381*
27' *(8.23 m)* offset fly (stowed)	1,052	*477*	1793	*813*	–741	*–336*	–703	*–319*	1,755	*796*
27 – 44' *(8.23 – 13.41 m)* offset fly (stowed)	1,475	*669*	2314	*1050*	–839	*–381*	–785	*–356*	2,260	*1025*
Floodlight to boom base section	4	*2*	7	*3*	–3	*–1*	–3	*–1*	7	*3*
Auxiliary lifting sheave	71	*32*	204	*93*	–132	*–60*	–130	*–59*	201	*91*
Four–Section Boom										
Fly brackets to boom base sections for fly options	140	*64*	200	*91*	–60	*–27*	–55	*–25*	195	*88*
25' *(7.62 m)* fixed fly (stowed)	535	*243*	813	*369*	–278	*–126*	–259	*–117*	794	*360*
27' *(8.23 m)* offset fly (stowed)	1,052	*477*	1701	*772*	–649	*–294*	–611	*–277*	1,663	*754*
27 – 44' *(8.23 – 13.41 m)* offset fly (stowed)	1,475	*669*	2184	*991*	–710	*–322*	–656	*–298*	2,131	*967*
Floodlight to boom base section	4	*2*	7	*3*	–3	*–1*	–3	*–1*	7	*3*
Auxiliary lifting sheave	71	*32*	197	*82*	–126	*–57*	–124	*–56*	195	*88*

[1] – Adjust gross weight and axle loading according to component weight. Note: All weights are ± 3%.

®Link–Belt is a registered trademark. Copyright 2003. All rights reserved. We are constantly improving our products and therefore reserve the right to change designs and specifications.

Technical Data

Specifications & Capacities

RTC 8030

Series II

Telescopic Boom Rough Terrain Crane

30 ton *(27.2 metric ton)*

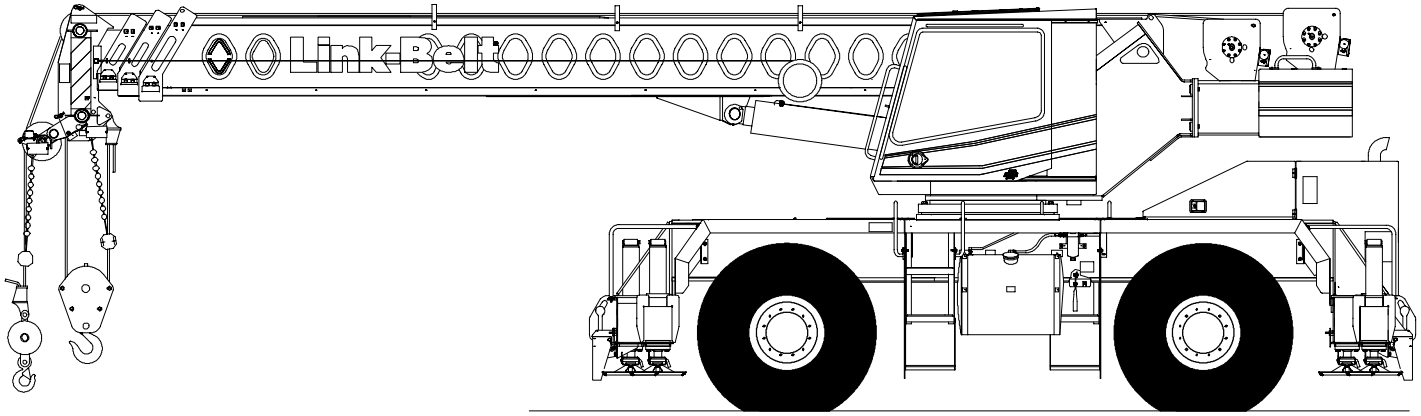

CAUTION: This material is supplied for reference use only. Operator must refer to in – cab Crane Rating Manual and Operator's Manual to determine allowable crane lifting capacities and assembly and operating procedures.

Table Of Contents

Boom, Attachments, and Upper Structure **1**
Boom 1
Boom Head 1
Boom Elevation 1
Auxiliary Lifting Sheave – Optional 1
Hook Blocks and Balls – Optional 1
Fly – Optional 1
Operator's Cab and Controls 1
Swing 2
Electrical 2
Load Hoist System 3
Load Hoist Performance 3
2M Main and Optional Auxiliary Winches 3
Hydraulic System 3
Counterweight 3
Carrier **4**
General 4
Outriggers 4
Steering and Axles 4
Suspension 4
Tires and Wheels 4
Brakes 4
Electrical 4
Engine 4
Transmission 4
Carrier Speeds and Gradeability 5
Fuel Tank 5
Hydraulic System 5
Pump Drive 5
Axle Loads **6**
General Dimensions **7**
Working Range Diagram **8**
Boom Extend Modes **9**
Main Boom Lift Capacity Charts – Standard **10**
Fully Extended Outriggers – 360˚ Rotation 10
On Tires – Stationary – Boom Centered Over Front Between Tire Tracks 11
On Tires – Pick & Carry (Creep) – Boom Centered Over Front 11
On Tires – Stationary – 360˚ Rotation 11
Fly Attachment Lift Capacity Charts – Optional **12**
Fully Extended Outriggers – 360˚ Rotation 12
91.25 ft Main Boom Length 12
Fully Extended Outriggers – 360˚ Rotation 13
91.25 ft Main Boom Length – 2˚ Fly Offset 13
91.25 ft Main Boom Length – 20˚ Fly Offset 13
91.25 ft Main Boom Length – 40˚ Fly Offset 13

Main Boom Lift Capacity Charts – Optional (Metric) 14
Fully Extended Outriggers – 360˚ Rotation 14
On Tires – Stationary – Boom Centered Over Front Between Tire Tracks 15
On Tires – Pick & Carry (Creep) – Boom Centered Over Front 15
On Tires – Stationary – 360˚ Rotation 16
Fly Attachment Lift Capacity Charts – Optional (Metric) 16
Fully Extended Outriggers – 360˚ Rotation 16
27.81m Main Boom Length 16
Fully Extended Outriggers – 360˚ Rotation 17
27.81m Main Boom Length – 2˚ Fly Offset 17
27.81m Main Boom Length – 20˚ Fly Offset 17
27.81m Main Boom Length – 40˚ Fly Offset 17

Boom, Attachments, and Upper Structure

■ Boom

Design – Four section, box type construction of high tensile steel consisting of one base section and three telescoping sections. The vertical side plates have diamond shaped steel impressions for superior strength to weight ration. The first telescoping section extends independently by means of one double–acting, single stage hydraulic cylinder with integrated holding valves. The second and third telescoping sections extend proportionally by means of one double–acting, single stage cylinder with integrated holding valves and cables.

Boom

- 29 ft–91 ft 4 in (*8.84–27.84m*) four section full power boom
- Two mode boom extension: *A–max* mode provides superior capacities by extending the first telescoping section to 49 ft 9 in (*15.16m*). Standard mode synchronizes all the telescoping sections proportionally to 91 ft 4 in (*27.84m*). Controlled from the operator's cab.
- Mechanical boom angle indicator
- Maximum tip height for *A–max* mode is 66 ft 2 in (*20.2m*) and standard mode is 100 ft 6 in (*30.6m*).

Boom Head

- Four 10.63 in (*27.0cm*) root diameter nylon sheaves to handle up to eight parts of line
- Easily removable wire rope guards
- Rope dead end lugs on each side of the boom head
- Boom head is designed for quick–reeve of the hook block

Boom Elevation

- One double acting hydraulic cylinder with integral holding valve
- Boom elevation: –3° to 78°

Auxiliary Lifting Sheave – Optional

- Single 10.63 in (*27.0cm*) root diameter steel sheave
- Easily removable wire rope guards
- Does not affect erection of the fly or use of the main head sheaves

Hook Blocks and Balls – Optional

- 30 ton (*27.2mt*) 3 sheave quick–reeve hook block with safety latch
- 8.5 ton (*7.7mt*) swivel and non–swivel hook balls with safety latch

Fly – Optional

- 25 ft (*7.62m*) one piece lattice fly, stowable. Maximum tip height is 124.63 ft (*37.99m*).
- 27 ft (*8.23m*) one piece lattice fly, stowable, offsettable to 2°, 20°, and 40°. Maximum tip height is 126.33 ft (*38.51m*).
- 27–44 ft (*8.23–13.41m*) two piece bi–fold lattice fly, stowable, offsettable to 2°, 20°, and 40°. Maximum tip height is 143.11 ft (*43.62m*).

■ Operator's Cab and Controls

Environmental Cab – Fully enclosed, one person cab of galvaneal steel structure with acoustical insulation. Equipped with:

- Tinted and tempered glass windows
- Large fixed front window with windshield wiper and washer
- Swing up roof window with windshield wiper
- Sliding left side door with large fixed window
- Sliding rear and right side windows for ventilation
- Six way adjustable, cushioned seat with seat belt
- Engine dependent warm–water heater with air ducts for front windshield defroster and cab floor
- 12 volt accessory outlet
- Bubble level
- Circulating fan
- Adjustable sun visor
- Dome light
- Cup holder
- Fire extinguisher
- Mirrors
- Emergency steering system – optional

Air Conditioning – Optional

Steering Column – Conventional automotive type with tilt and telescope functions for operator comfort. Steering column includes the following controls and indicators:

- Tilt lever
- Turn signal lever
- Windshield wiper and washer switch
- Headlight switch
- Telescoping column lock
- Steering wheel
- Horn button
- Engine ignition switch
- Ignition switch lock
- Hazard flasher button

Armrest Controls – Two single axis controllers or optional single axis hydraulic controllers for:
- Swing
- Boom hoist
- Main rear winch
- Auxiliary front winch – optional
- Drum rotation indication
- Drum rotation indicator activation switch
- Winch high/low speed and disable switch(es)
- Throttle lock
- Telescopic override switches

Foot Controls
- Boom telescope
- Swing brake
- Engine throttle
- Carrier service brake

Dash Panel

Controls for:
- Combination steering
- 4 – wheel drive
- Transmission gear selection
- Rated capacity limiter
- Two position swing lock
- Swing park brake
- Function lockout
- Outrigger system
- Upper lights – optional
- Rotating beacon – optional
- Ether start – optional
- Air conditioner and heater – optional
- Third wrap indicator activation – optional
- Boom floodlight – optional

Indicators for:
- Service brake
- Rear wheel offset – optional
- First layer/Third wrap – optional

Gauges for:
- Fuel level
- Hydraulic oil temperature
- Voltage indicator
- Water temperature
- Engine oil pressure
- Tachometer
- Transmission oil temperature

Rated Capacity Limiter – Microguard 434 graphic audio – visual warning system integrated into the dash with anti – two block and function limiter. Operating data available includes:
- Crane configuration
- Boom length
- Boom head height
- Allowed load and % of allowed load
- Boom angle
- Radius of load
- Actual load
- Operator settable alarms (include):
  - Maximum and minimum boom angles
  - Maximum tip height
  - Maximum boom length
  - Swing left/right positions
  - Operator defined area (imaginary plane)

Internal RCL Light Bar – Optional – Visually informs the operator when crane is approaching maximum load capacity with a series of green, yellow, and red lights.

External RCL Light Bar – Optional – Visually informs the ground crew when crane is approaching maximum load capacity with a series of green, yellow, and red lights.

■ Swing

Motor/Planetary – Bi – directional hydraulic swing motor mounted to a planetary reducer for 360˚ continuous smooth swing at 2.8 rpm.

Swing Park Brake – 360˚, mechanical disc brake mounted on the speed reducer. Mechanically controlled from the operator's cab.

Swing Brake – 360˚, foot operated, hydraulic applied disc brake mounted to the speed reducer.

Swing Lock – Two – position swing lock (boom over front or rear) operated from the operator's cab.

360˚ Positive Swing Lock – Optional – Meets New York City requirement.

■ Electrical

Swing Alarm – Audio warning device signals when the upper is swinging.

Lights
- Two working lights on front of the cab – optional
- One rotating amber beacon on top of the cab – optional
- One amber strobe beacon on top of the cab – optional
- Boom floodlight – optional

Load Hoist System

Load Hoist Performance

Main (Rear) and Auxiliary (Front) Winches – 5/8 in (*16mm*) Rope										
	Maximum Line Pull		Normal Line Speed		High Line Speed		Layer		Total	
Layer	lb	*kg*	ft/min	*m/min*	ft/min	*m/min*	ft	*m*	ft	*m*
1	11,948	*5 419.5*	174	*53.0*	318	*96.9*	77	*23.5*	77	*23.5*
2	10,807	*4 902.0*	192	*58.5*	352	*107.3*	84	*25.6*	161	*49.1*
3	9,866	*4 475.1*	210	*64.0*	385	*117.3*	93	*28.3*	254	*77.4*
4	9,075	*4 116.4*	229	*69.8*	419	*127.7*	101	*30.8*	355	*108.2*
5	8,401	*3 810.6*	247	*75.3*	452	*137.8*	109	*33.2*	464	*141.4*
6	– –	– –	– –	– –	– –	– –	117	*35.6*	581	*177.1*

Wire Rope Application		Diameter		Type	Maximum Permissible Load	
		in	*mm*		lb	*kg*
Main (Rear) Winch	Standard	5/8	*16*	6x19 I.W.R.C. – Right Regular Lay (Type DB)	11,770	*3 587.5*
	Optional	5/8	*16*	18x19 Rotation Resistant – Right Regular Lay (Type RB)	9,080	*2 767.6*
Auxiliary (Front) Winch	Standard	5/8	*16*	6x19 I.W.R.C. – Right Regular Lay (Type DB)	11,770	*3 587.5*
	Optional	5/8	*16*	18x19 Rotation Resistant – Right Regular Lay (Type RB)	9,080	*2 767.6*

2M Main and Optional Auxiliary Winches

- Bi–directional gear–type (2–speed) hydraulic motors driven through planetary reduction unit for positive control under all load conditions.
- Grooved lagging
- Power up/down mode of operation
- Hoist drum cable follower
- Drum rotation indicator
- Drum diameter: 10.63 in (*27.00cm*)
- Rope length:
  - Main: 450 ft (*137.1m*)
  - Auxiliary: 450 ft (*137.1m*)
- Maximum rope storage: 581 ft (*177.1m*)
- Terminator style socket and wedge

Third wrap indicator – optional – Visually and audibly warns the operator when the wire rope is on the first/bottom layer and when the wire rope is down to the last three wraps.

Hydraulic System

Counterbalance Valves – All hoist motors, boom extend cylinders, and boom hoist cylinders are equipped with counterbalance valves to provide load lowering and prevents accidental load drop when hydraulic power is suddenly reduced.

Counterweight

Total of 9,300 lb (*4 218kg*) of counterweight bolted to the upper structure frame.

Carrier

General

- 8 ft 6 in (*3.31m*) wide
- 11 ft 5 in (*3.48m*) wheelbase (centerline of first axle to centerline of second axle).

Frame – Box–type, torsion resistant, welded construction made of high tensile steel. Equipped with front towing shackles, pontoon storage brackets, hook block tie back, and front, rear, and side carrier steps.

Outriggers

Boxes – Two double box, front and rear welded to carrier frame.

Beams and Jacks – Four single stage beams with Confined Area Lifting Capacities (CALC™) provide selectable outrigger extensions of full, intermediate, and retracted. Hydraulically controlled from the operator's cab with integral check valves.

Pontoons – Four lightweight, quick release, 18.75 in (*47.63cm*) steel pontoons with contact area of 289 in^2 (*1 864.5*cm^2) can be stored for road travel in storage racks on the carrier.

Main Jack Reaction – 50,000 lb (*22 679.6kg*) force and 173 psi (*1 116.0kPa*) ground bearing pressure.

Steering and Axles

Steering – Three independent modes consisting of conventional two wheel front, four wheel, and crab. Each mode is selected by a switch on the dash and fully controlled by the steering wheel.

Drive – Two modes: 4 x 2 and 4 x 4 for off highway travel
Axle 1 – Steered, non–driven for 4 x 2 and steered, driven for 4 x 4
Axle 2 – Steered, driven

Suspension

Front – Rigid mount to the carrier frame

Rear – The rear axle is suspended on the oscillation cylinders with motion of the axle controlled by a four bar linkage system. The oscillation cylinders lockout when the upper structure rotates 2.5˚ past centerline.

- Hydro–gas rear suspension – optional

Tires and Wheels

Front and Rear – Four (single) 20.5R25, 24 ply rating, loader type tires on steel disc wheels

- Spare tires and wheels – optional

Brakes

Service – Full hydraulic, dual circuit, disc type brakes on all wheel ends with independent front and rear system

Parking/Emergency – Spring applied, hydraulic released, cab controlled, disc type integral to the transmission

Electrical

Two batteries provide 12 volt operation and starting

Lights

- Front lighting includes two main headlights, and two parking/directional indicators
- Rear lighting includes two parking/directional indicators, two parking/brake lights, and two reversing lights
- Other equipment includes hazard/warning system, cab light, dash panel lighting, and signal horn

Engine

Specification	Cummins 6BT 5.9L
Numbers of Cylinders	6
Cycle	4
Bore and Stroke: inch (*mm*)	4.02 x 4.72 (*102 x 120*)
Piston Displacement: in^3 (*L*)	359 (*5.9*)
Max. Brake Horsepower: hp (*kW*)	152 (*113*) @ 2,500 rpm
Peak Torque: ft lb (*J*)	414 (*563*) @ 1,600 rpm
Alternator: volts – amps	12 – 130
Crankcase Capacity: qt (*L*)	17.3 (*16.4*)

- Mechanically driven fan and thermostatically controlled radiator
- Water/Fuel separator
- 110–volt block heater
- Ether injection package

Transmission

Powershift – Three speed with high/low range for 6 forward and 6 reverse gears. Front axle disconnect for two or four wheel drive. Front axle disconnects in high range.

Carrier Speeds and Gradeability

Dana Spicer			Speed		Gradeability (@ 70% Converter efficiency)
Gear		Ratio	mph	*km/h*	% Grade
6th	Forward 2WD Hi	0.704	24.97	*40.19*	2.8
5th		2.111	9.41	*15.14*	13.1
4th		4.825	4.18	*6.73*	32.2
3rd	Forward 4WD Low	1.576	12.89	*20.74*	8.7
2nd		4.727	4.28	*6.89*	31.5
1st		10.805	1.9	*3.06*	101.3
2nd	Reverse 2WD	4.825	4.18	*6.73*	32.2
1st	Reverse 4WD	10.805	1.9	*3.06*	101.3

Based on a gross vehicle weight of 51,200 lb (*23 224kg*).

Crane operating angle must not exceed 25˚ (47% grade).

Fuel Tank

One 75 gallon (*283.9L*) capacity tank

Hydraulic System

All functions are hydraulically powered allowing positive precise, control.

Main Pumps

- One two section fixed displacement gear pump for the front/rear winches and boom hoist/telescope circuits.
- One single section fixed displacement gear pump for the steering/swing/outriggers/service brake circuit.
- Combined pump capacity of 93 gpm (*352.0Lpm*).

Hydraulic Reservoir – 80 gal (*303L*) capacity equipped with sight level gauge. Diffusers built in for deaeration.

Filtration – Two 10 micron, full flow, line filter in the control circuit. All oil is filtered prior to return to sump tank. Accessible for easy filter replacement.

Pump Drive

All pumps are mechanically driven by the diesel engine.

- Front /rear winches, boom hoist, and telescope pumps are mounted to a mechanical pump disconnect on the transmission torque convertor to aid in cold weather starting. – Optional

Axle Loads

Base crane with full tank of fuel	Gross Vehicle Weight (1)		Upper Facing Front				Upper Facing Rear			
			Front Axles		Rear Axles		Front Axles		Rear Axles	
	lb	*kg*	lb	*kg*	lb	*kg*	lb	*kg*	lb	*kg*
	55,526	***25 186***	**27,561**	***12 501***	**27,965**	***12 685***	**25,238**	***11 448***	**30,288**	***13 738***
Cold weather starting aids – ether injection	6	*3*	0	*0*	6	*3*	0	*0*	6	*3*
Pintle hook, front and rear	26	*12*	13	*6*	13	*6*	13	*6*	13	*6*
Pump disconnect	28	*13*	6	*3*	21	*10*	6	*3*	21	*10*
Power up/down winch with 450 ft (*137.1m*) wire rope – front	361	*164*	–28	*–13*	389	*176*	402	*182*	–41	*–19*
Winch roller – rear winch	76	*34*	–14	*–6*	90	*41*	93	*42*	–17	*–8*
Winch roller – front winch	76	*36*	1	*0*	75	*34*	78	*35*	–2	*–1*
Remove 450 ft (*137.1m*) wire rope from rear winch	–320	*–145*	82	*37*	–402	*–182*	–413	*–187*	94	*43*
Remove 450 ft (*137.1m*) wire rope from front winch	–320	*–145*	21	*10*	–340	*–154*	–352	*–160*	33	*15*
Air conditioning in operator's cab	215	*98*	36	*16*	179	*81*	187	*85*	28	*13*
360˚ swing lock	60	*27*	29	*13*	31	*14*	33	*15*	27	*12*
Emergency steer system	5	*2*	3	*1*	2	*1*	2	*1*	3	*1*
Fly storage brackets to boom base section for fly options	140	*64*	200	*91*	–60	*–27*	–55	*–25*	195	*88*
25 ft (*7.62m*) fixed fly – stowed	535	*243*	813	*369*	–278	*–126*	–259	*–117*	794	*360*
27 ft (*8.23m*) offset fly – stowed	1,052	*477*	1,701	*772*	–649	*–294*	–611	*–277*	1,663	*754*
27–44 ft (*8.23–13.41m*) offset fly – stowed	1,475	*669*	2,184	*991*	–710	*–322*	–656	*–298*	2,131	*967*
Floodlight to boom base section	4	*2*	7	*3*	–3	*–1*	–3	*–1*	7	*3*
30 ton (*27.2mt*) hook block to carrier storage box	670	*304*	943	*428*	–273	*–124*	–248	*–112*	918	*416*
8.5 ton (*7.7mt*) hook block to carrier storage box	360	*163*	506	*230*	–146	*–66*	–133	*–60*	493	*225*
Auxiliary lifting sheave	71	*32*	197	*82*	–126	*–57*	–124	*–56*	195	*88*

Tire	Maximum Load @ 25 mph (*40.2km/h*)
20.5R25 (24–PR)	16,125 lb (*7 314kg*)

(1) Adjust gross vehicle weight and axle loading according to component weight.
Note: All weights are ±3%.

General Dimensions

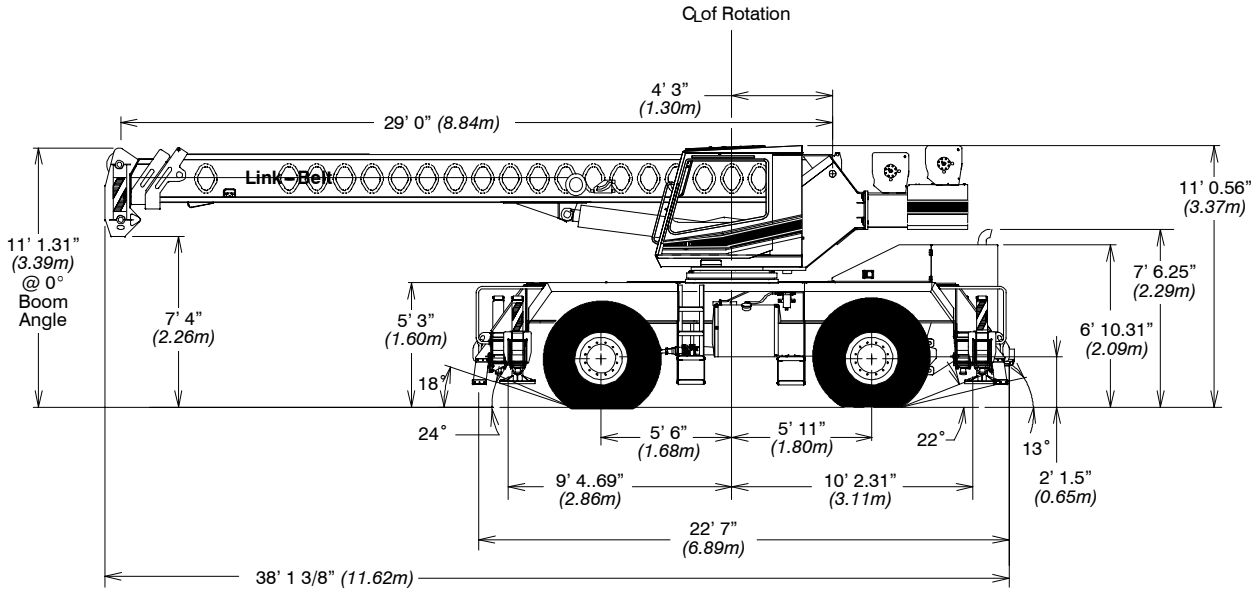

Turning Radius – Front Wheel (4x2) Steering	English	*Metric*
Wall to wall over carrier	35'	*10.67m*
Wall to wall over boom attachment	43' 1"	*13.13m*
Curb to curb	33' 2"	*10.11m*
Centerline of tire	31' 8"	*9.64m*

Turning Radius – All Wheel (4x4) Steering	English	*Metric*
Wall to wall over carrier	20' 8"	*6.31m*
Wall to wall over boom attachment	30' 2"	*9.20m*
Curb to curb	18' 9"	*5.71m*
Centerline of tire	17' 1"	*5.21m*

Tail Swing	English	*Metric*
With counterweight	9' 11.5"	*3.04m*
Without counterweight	N/A	*N/A*

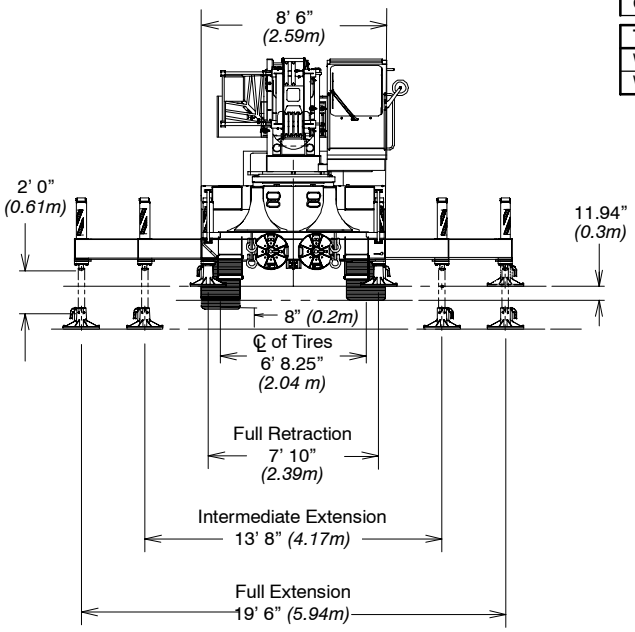

Not To Scale

Working Range Diagram

Working Range Diagram On Fully Extended Outriggers

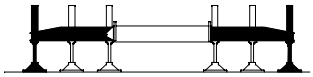

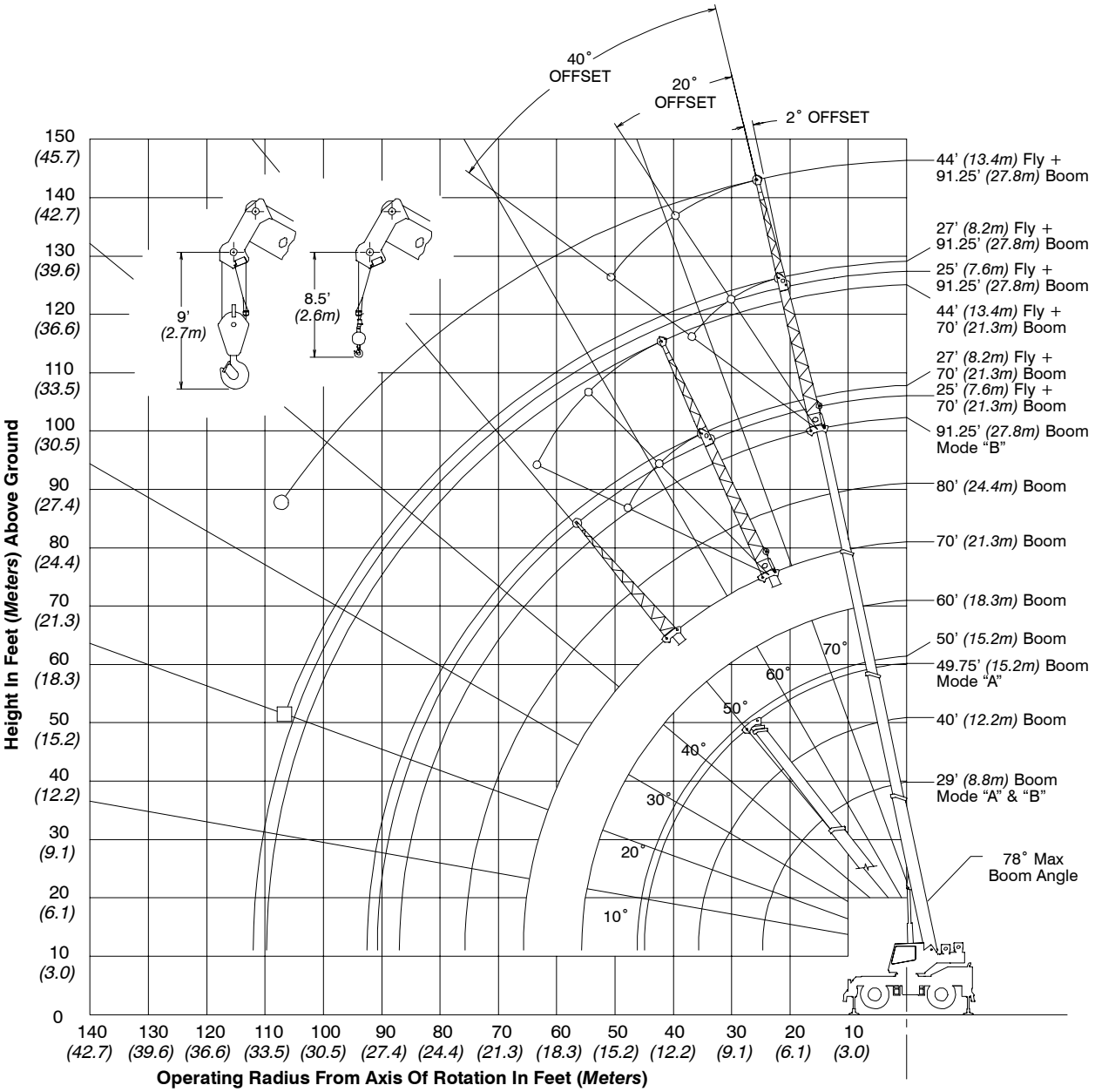

○ **Denotes Main Boom + 44' *(13.4m)* Offset Fly – Boom Mode "B"**
□ **Denotes Main Boom + 27' *(8.2m)* Offset Fly – Boom Mode "B"**

Boom Extend Modes

Boom Mode “A” (A-max)

Only inner mid section telescopes.

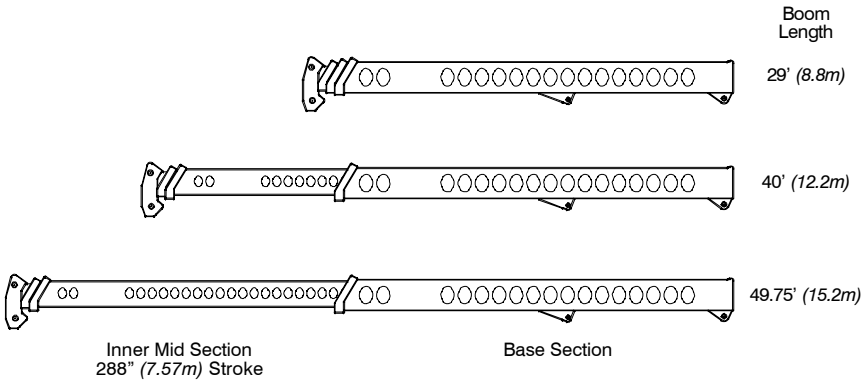

Boom Mode “B” (Standard)

Inner mid, outer mid, and tip sections telescope simultaneously.

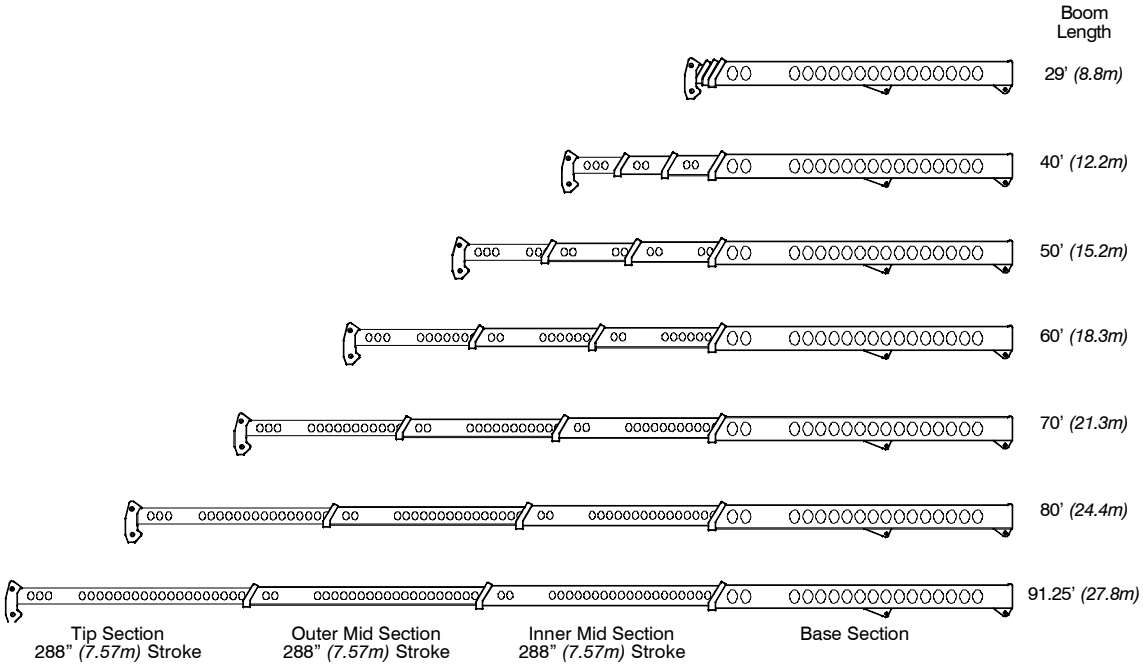

Main Boom Lift Capacity Charts – Standard

Fully Extended Outriggers – 360° Rotation (All Capacities Are Listed In Pounds)								
Radius (ft)	Boom Length (ft)							Radius (ft)
	29	40	50	60	70	80	91.25	
10	60,000	50,100	31,300					10
12	52,300	47,600	31,300	25,000				12
15	43,000	40,600	31,300	25,000	25,000			15
20	31,200	30,900	27,600	25,000	25,000	25,000	19,000	20
25		24,300	24,600	24,200	22,700	21,400	19,000	25
30		19,200	19,500	19,700	19,100	18,100	16,800	30
35		15,500	15,900	16,100	16,200	15,500	14,700	35
40			12,700	12,900	13,000	13,000	12,800	40
45			10,200	10,400	10,500	10,600	10,700	45
50				8,600	8,700	8,800	8,800	50
55				7,100	7,200	7,300	7,400	55
60					6,100	6,100	6,200	60
65					5,100	5,200	5,200	65
70						4,400	4,400	70
75						3,700	3,800	75
80							3,200	80
85							2,700	85

This information is not for crane operation. Operator must refer to the in – cab information for crane operation. Rated lifting capacities shown on fully extended outriggers do not exceed 85% of the tipping loads and on tires do not exceed 75% of the tipping loads.

On Tires -- Stationary -- Boom Centered Over Front Between Tire Tracks
(All Capacities Are Listed In Pounds)

Radius (ft)	Boom Length (ft)				Radius (ft)
	29	40	50	60	
10	32,800	25,000			10
12	28,900	28,600			12
15	24,300	24,800			15
20	17,400	18,100	18,300		20
25		12,300	12,600	12,700	25
30		8,800	9,200	9,300	30
35		6,500	6,900	7,100	35
40			5,200	5,400	40
45			4,000	4,200	45
50				3,200	50
55				2,500	55

On Tires -- Pick & Carry (Creep) -- Boom Centered Over Front
(All Capacities Are Listed In Pounds)

Radius (ft)	Boom Length (ft)				Radius (ft)
	29	40	50	60	
10	31,900	25,000			10
12	27,600	25,000			12
15	22,700	23,200			15
20	17,000	17,500	17,800		20
25		12,300	12,600	12,700	25
30		8,800	9,200	9,300	30
35		6,500	6,900	7,100	35
40			5,200	5,400	40
45			4,000	4,200	45
50				3,200	50
55				2,500	55

On Tires -- Stationary -- 360° Rotation
(All Capacities Are Listed In Pounds)

Radius (ft)	Boom Length (ft)				Radius (ft)
	29	40	50	60	
10	24,000	24,400			10
12	17,700	18,200			12
15	12,000	12,700			15
20	7,000	7,700	7,900		20
25		4,900	5,200	5,300	25
30		3,100	3,400	3,600	30
35		1,800	2,200	2,400	35

This information is not for crane operation. Operator must refer to the in – cab information for crane operation. Rated lifting capacities shown on fully extended outriggers do not exceed 85% of the tipping loads and on tires do not exceed 75% of the tipping loads.

Fly Attachment Lift Capacity Charts – Optional

Fully Extended Outriggers – 360° Rotation (All Capacities Are Listed In Pounds)	
91.25 ft Main Boom Length	
Radius (ft)	25 ft Fixed Fly
30	10,200
35	10,200
40	9,800
45	9,200
50	8,400
55	7,700
60	6,900
65	5,900
70	5,100
75	4,400
80	3,800
85	3,300
90	2,900
95	2,500
100	2,100
105	1,800
110	1,500

This information is not for crane operation. Operator must refer to the in – cab information for crane operation. Rated lifting capacities shown on fully extended outriggers do not exceed 85% of the tipping loads and on tires do not exceed 75% of the tipping loads.

Fully Extended Outriggers – 360° Rotation
(All Capacities Are Listed In Pounds)

91.25 ft Main Boom Length 2° Fly Offset			91.25 ft Main Boom Length 20° Fly Offset			91.25 ft Main Boom Length 40° Fly Offset		
Radius (ft)	Fly Length (ft)		Radius (ft)	Fly Length (ft)		Radius (ft)	Fly Length (ft)	
	27	44		27	44		27	44
30	9,900		35	7,200		45	5,000	
35	9,700	6,500	40	6,800		50	4,800	
40	9,300	6,000	45	6,400		55	4,600	
45	8,600	5,500	50	6,100	3,600	60	4,500	2,500
50	7,800	5,100	55	5,800	3,400	65	4,400	2,400
55	7,200	4,700	60	5,500	3,200	70	4,300	2,300
60	6,600	4,400	65	5,200	3,100	75	4,200	2,300
65	5,600	4,100	70	5,000	2,900	80	4,000	2,200
70	4,800	3,800	75	4,400	2,800	85	3,400	2,200
75	4,100	3,600	80	3,800	2,700	90	2,900	2,100
80	3,500	3,400	85	3,200	2,500	95	2,400	2,100
85	3,000	3,200	90	2,800	2,400	100		2,100
90	2,600	2,800	95	2,300	2,400	105		2,100
95	2,200	2,400	100	2,000	2,300	110		1,800
100	1,800	2,000	105	1,600	2,000	115		1,500
105	1,500	1,700	110	1,300	1,700			
110		1,400	115		1,400			

This information is not for crane operation. Operator must refer to the in – cab information for crane operation. Rated lifting capacities shown on fully extended outriggers do not exceed 85% of the tipping loads and on tires do not exceed 75% of the tipping loads.

Main Boom Lift Capacity Charts – Optional (Metric)

Fully Extended Outriggers – 360° Rotation
(All Capacities Are Listed In Kilograms)

Radius (m)	Boom Length (m)							Radius (m)
	8.84	12.2	15.16/15.2	18.3	21.3	24.4	27.81	
3	27 220	22 700	14 150**					3
3.5	23 900	22 000	14 150**					3.5
4	22 200	20 300	14 150**	11 300				4
4.5	20 250	18 600	14 150**	11 300				4.5
5	17 900	17 200	14 150**	11 300	11 300			5
6	14 400	14 300	12 700**	11 300	11 300	11 300	8 600	6
7	11 900	11 800	11 300	11 300	10 950	10 400	8 600	7
8		10 350	10 500	10 600	9 850	9 300	8 450	8
9		8 600	8 700	8 800	8 800	8 350	7 700	9
10		7 100	7 250	7 300	7 350	7 350	7 050	10
12			5 250	5 300	5 350	5 350	5 350	12
14				4 000	4 050	4 100	4 100	14
16				3 100	3 150	3 200	3 200	16
18					2 500	2 550	2 550	18
20					2 000	2 000	2 050	20
22						1 600	1 650	22
24							1 300	24
26							1 050	26

** 15.16 A – max Mode

This information is not for crane operation. Operator must refer to the in – cab information for crane operation. Rated lifting capacities shown on fully extended outriggers do not exceed 85% of the tipping loads and on tires do not exceed 75% of the tipping loads.

On Tires -- Stationary -- Boom Centered Over Front Between Tire Tracks
(All Capacities Are Listed In Kilograms)

Radius (m)	Boom Length (m)				Radius (m)
	8.84	12.2	15.2	18.3	
3	15 050	11 300			3
3.5	13 500	11 300			3.5
4	12 250	12 100			4
4.5	11 150	11 300			4.5
5	9 800	10 000			5
6	7 050	7 300	7 400		6
7	5 300	5 600	5 700	5 750	7
8		4 450	4 550	4 600	8
9		3 600	3 700	3 750	9
10		2 900	3 050	3 100	10
12			2 100	2 200	12
14				1 550	14
16				1 100	16

On Tires -- Pick & Carry (Creep) -- Boom Centered Over Front
(All Capacities Are Listed In Kilograms)

Radius (m)	Boom Length (m)				Radius (m)
	8.84	12.2	15.2	18.3	
3	14 650	11 300			3
3.5	13 000	11 300			3.5
4	11 600	11 500			4
4.5	10 450	10 650			4.5
5	9 450	9 650			5
6	7 050	7 300	7 400		6
7	5 300	5 600	5 700	5 750	7
8		4 450	4 550	4 600	8
9		3 600	3 700	3 750	9
10		2 900	3 050	3 100	10
12			2 100	2 200	12
14				1 550	14
16				1 100	16

This information is not for crane operation. Operator must refer to the in – cab information for crane operation. Rated lifting capacities shown on fully extended outriggers do not exceed 85% of the tipping loads and on tires do not exceed 75% of the tipping loads.

On Tires – Stationary – 360° Rotation (All Capacities Are Listed In Kilograms)					
Radius (m)	Boom Length (m)				Radius (m)
	8.84	12.2	15.2	18.3	
3	9 650	9 850			3
3.5	7 450	7 650			3.5
4	5 950	6 200			4
4.5	4 850	5 100			4.5
5	4 050	4 300			5
6	2 850	3 100	3 200		6
7	2 050	2 300	2 400	2 450	7
8		1 700	1 800	1 900	8
9		1 250	1 400	1 450	9
10		900	1 050	1 100	10

Fly Attachment Lift Capacity Charts – Optional (Metric)

Fully Extended Outriggers – 360° Rotation (All Capacities Are Listed In Kilograms)	
27.81m Main Boom Length	
Radius (m)	7.62m Fixed Fly
9	4 600
10	4 600
12	4 450
14	4 100
16	3 500
18	2 800
20	2 300
22	1 900
24	1 550
26	1 300
28	1 050
30	900
32	700
34	600

This information is not for crane operation. Operator must refer to the in–cab information for crane operation. Rated lifting capacities shown on fully extended outriggers do not exceed 85% of the tipping loads and on tires do not exceed 75% of the tipping loads.

Fully Extended Outriggers – 360° Rotation (All Capacities Are Listed In Kilograms)								
27.81m Main Boom Length 2° Fly Offset			27.81m Main Boom Length 20° Fly Offset			27.81m Main Boom Length 40° Fly Offset		
Radius (m)	Fly Length (m)		Radius (m)	Fly Length (m)		Radius (m)	Fly Length (m)	
	8.23	13.41		8.23	13.41		8.23	13.41
9	4 500		12	3 100		14	2 250	
10	4 500		14	2 850		16	2 150	
12	4 250	2 750	16	2 700	1 600	18	2 050	1 150
14	3 850	2 500	18	2 500	1 500	20	2 000	1 100
16	3 350	2 250	20	2 350	1 400	22	1 950	1 050
18	2 700	2 000	22	1 950	1 300	24	1 650	1 000
20	2 200	1 850	24	1 550	1 200	26	1 350	1 000
22	1 800	1 700	26	1 300	1 150	28	1 100	950
24	1 450	1 550	28	1 050	1 100	30		950
26	1 200	1 300	30	800	1 000	32		850
28	950	1 050	32	650	800	34		650
30	750	850	34		600			
32	600	700						
34		550						

This information is not for crane operation. Operator must refer to the in – cab information for crane operation. Rated lifting capacities shown on fully extended outriggers do not exceed 85% of the tipping loads and on tires do not exceed 75% of the tipping loads.

This Page Intentionally Blank

Link-Belt Construction Equipment Company Lexington, Kentucky www.linkbelt.com
®Link-Belt is a registered trademark. Copyright 2006. We are constantly improving our products and therefore reserve the right to change designs and specifications.

Link-Belt
CONSTRUCTION EQUIPMENT

Lifting Capacities

Hydraulic Rough Terrain Crane

RTC–8030 Series II 30–ton *(27.2 metric tons)*

Four–Section Boom Capacities

Boom and Fly Capacities for this machine are listed by the following sections.

Fully Extended Outriggers

- Working Range Diagram
- 29’ to 49’ 9” Main Boom Capacities, “A–max” Mode
- 29’ to 91’ 3” Main Boom Capacities, Basic Mode “B”
- 25’ Fly Capacities, Basic Mode “B”
- 27’ to 44’ Fly Capacities, Basic Mode “B”

On Tires

- Working Range Diagram
- 29’ to 49’ 9” Main Boom Capaicities, “A–max” Mode
- 29’ to 60’ Main Boom Capacities, Basic Mode “B”

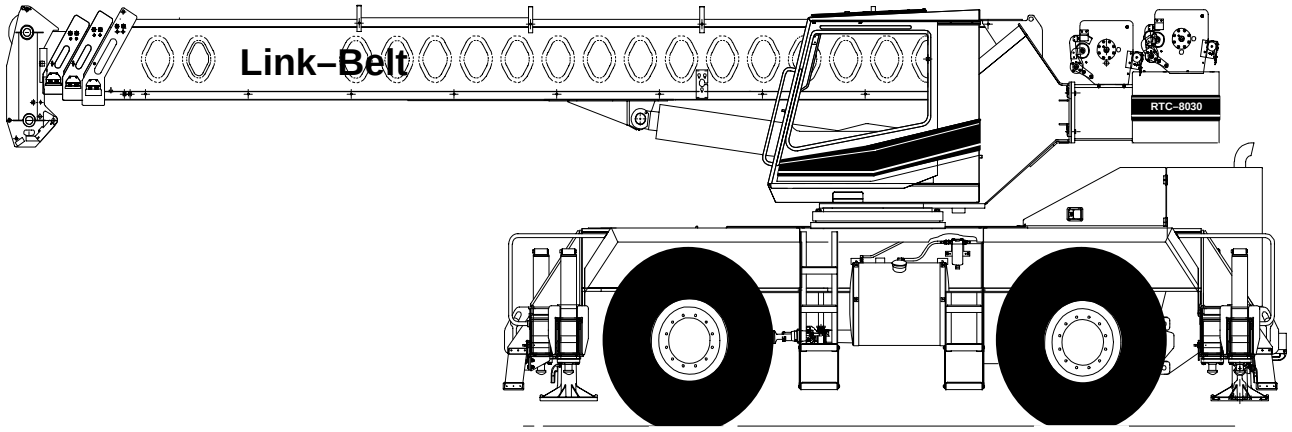

CAUTION: This material is supplied for reference use only. Operator must refer to in–cab Crane Rating Manual to determine allowable machine lifting capacities and operating procedures.

Litho in U.S.A. 10/99 #6244

⚠ WARNING

READ AND UNDERSTAND THE OPERATOR'S AND SAFETY MANUALS AND THE FOLLOWING INSTRUCTIONS AND RATED LIFTING CAPACITIES BEFORE OPERATING CRANE. OPERATION WHICH DOES NOT FOLLOW THESE INSTRUCTIONS MAY RESULT IN AN ACCIDENT

OPERATING INSTRUCTIONS

GENERAL:

1. Rated lifting capacities in pounds as shown on lift charts pertain to this crane as originally manufactured and normally equipped. Modifications to the crane or use of optional equipment other than that specified can result in a reduction of capacity.
2. Construction equipment can be dangerous if improperly operated or maintained. Operation and maintenance of this crane must be in compliance with the information in the Operator's, Parts, and Safety Manuals supplied with this crane. If these manuals are missing, order replacements through the distributor.
3. The operator and other personnel associated with this crane shall read and fully understand the latest applicable American National Standards ASME B30.5 safety standards for cranes.
4. The rated lifting capacities are based on crane standing level on firm supporting surface.

SET UP:

1. The crane shall be leveled on a firm supporting surface. Depending on the nature of the supporting surface, it may be necessary to have structural supports under the outrigger pontoons or tires to spread the load to a larger bearing surface.
2. When making lifts on outriggers, all tires must be free of supporting surface. All outrigger beams must be extended to the same length; fully retracted, intermediate extended, or fully extended.
3. When operating on tires over side, do not exceed 75° maximum boom angle. Loss of backward stability will occur causing a backward tipping condition.
4. When making lifts on tires, they must be inflated to the recommended pressure. (See Operation note 20 and Tire Inflation.)
5. For required parts of line, see Wire Rope Capacity and Winch Performance.
6. Before setting up on intermediate outriggers, retracted outriggers, or tires, refer to Working Range Diagrams and rated lifting capacities to determine allowable crane configurations.

OPERATION:

1. Rated lifting capacities at rated radii shall not be exceeded. Do not tip the crane to determine allowable loads. For concrete bucket operation, weight of bucket and load shall not exceed 80% of rated lifting capacities. For clamshell bucket operation, weight of bucket and bucket contents is restricted to a maximum weight of 5,000 pounds or 80% of rated lifting capacity, whichever is less. For magnet operation, weight of magnet and load is restricted to a maximum weight of 5,000 pounds or 80% of rated lifting capacity, whichever is less. For clamshell and magnet operation, maximum boom length is restricted to 40 feet and the boom angle is restricted to a minimum of 35°. Lifts with any fly erected are prohibited for both clam and magnet operation.
2. Rated lifting capacities shown on fully extended outriggers do not exceed 85% of the tipping loads. Rated lifting capacities shown on intermediate extended or fully retracted outriggers are determined by the formula, rated load = (tipping load – 0.1 X load factor) / 1.25. Rated lifting capacities shown on tires do not exceed 75% of the tipping loads. Tipping loads are determined by SAE crane stability test code J–765.
3. Rated lifting capacities in the shaded areas are based on structural strength or hydraulic limitations and have been tested to meet minimum requirements of SAE J–1063 cantilevered boom crane structures–method of test. Rated lifting capacities in the non–shaded areas are based on stability ratings. Some capacities are limited by a maximum obtainable 78° boom angle.
4. Rated lifting capacities include the weight of hook ball/block, slings, bucket, magnet and auxiliary lifting devices. Their weights must be subtracted from the listed rated capacity to obtain the net load that can be lifted. Rated lifting capacities include the deduct for any fly stowed on the base of the boom. For deducts of any fly erected, but not used, see Capacity Deductions For Auxiliary Load Handling Equipment.
5. Rated lifting capacities are based on freely suspended loads. No attempt shall be made to move a load horizontally on the ground in any direction.
6. Rated lifting capacities are for lift crane service only.
7. Do not operate at radii or boom lengths (minimum or maximum) where capacities are not listed. At these positions, the crane can tip or cause boom failure.

8. The maximum loads that can be telescoped are not definable because of variation in loadings and crane maintenance, but it is permissible to attempt retraction and extension within the limits of the applicable load rating chart.
9. For main boom capacities when either boom length or radius or both are between values listed, proceed as follows:
   a. For boom lengths not listed, use rating for next longer boom length or next shorter boom length, whichever is smaller.
   b. For load radii not listed, use rating for next larger radius.
10. The user shall operate at reduced ratings to allow for adverse job conditions, such as: soft or uneven ground, out of level conditions, wind, side loads, pendulum action, jerking or sudden stopping of loads, hazardous conditions, experience of personnel, traveling with loads, electrical wires, etc. Side load on boom or fly is dangerous and shall be avoided.
11. Rated lifting capacities do not account for wind on suspended load or boom. Rated capacities and boom length shall be appropriately reduced as wind velocity approaches 20 mph.
12. When making lifts with auxiliary head machinery, the effective length of the boom increases by 2 feet.
13. Power sections of boom must be extended in accordance with boom mode “A” or “B”. In boom mode “B” all power sections must be extended or retracted equally.
14. The least stable rated working area depends on the configuration of the crane set up.
15. Rated lifting capacities are based on correct reeving. Deduction must be made for excessive reeving. Any reeving over minimum required (see Wire Rope Capacity) is considered excessive and must be accounted for when making lifts. Use Working Range Diagram to estimate the extra feet of rope then deduct 1 lb. for each extra foot of wire rope before attempting to lift a load.
16. The loaded boom angle combined with the boom length give only an approximation of the operating radius. The boom angle, before loading, should be greater to account for deflection. For main boom capacities, the loaded boom angle is for reference only. For fly capacities, the load radius is for reference only.
17. For fly capacities with main boom length less than 91.25ft. and greater than 70 ft., the rated loads are determined by the boom angle using the 91.25ft. boom and fly chart. For angles not shown use the next lower boom angle to determine the rated capacity.
18. For fly capacites with main boom length less than 70ft. the rated loads are determined by the boom angle only using the 70ft. boom and fly chart. For angles not shown, use the next lower boom angle to determine the rated capacity.
19. The 29ft. boom length structural capacities are based on boom fully retracted. If the boom is not fully retracted, do not exceed capacities shown for the 40ft. boom length.
20. Rated lifting capacities on tires depend on tire capacity, condition of tires, and tire air pressure. On tire capacities require lifting from main boom head only on a smooth and level surface. Pick and carry operations are restricted to speed of 2.5 mph and creep. The boom must be centered over the front of the crane with two–position travel swing lock engaged and the load must be restrained from swinging. Lifts with any fly erected on tires are prohibited. For correct tire pressure, see Tire Inflation.

DEFINITIONS:

1. Load Radius: Horizontal distance from a projection of the axis of rotation to the supporting surface, before loading, to the center of the vertical hoist line or tackle with load applied.
2. Loaded Boom Angle: $\measuredangle^{\circ}$ The angle between the boom base section and horizontal with freely suspended load at the rated radius.
3. Working Area: Area measured in a circular arc about the center line of rotation as shown on the Working Area Diagram.
4. Freely Suspended Load: Load hanging free with no direct external force applied except by the hoist line.
5. Side Load: Horizontal side force applied to the lifted load either on the ground or in the air.
6. No Load Stability Limit: The radius or boom angle beyond which it is not permitted to position the boom because the crane can overturn without any load on the hook.
7. Load Factor: Load applied at the boom tip which gives the same moment effect as the boom mass.
8. Creep: Crane movement limited to 200 ft. in a 30 min. period and not to exceed 1 mph maximum speed.

TIRE INFLATION

Tire Size	Operation	Tire Pressure (psi)
20.5 X 25–24 Ply Rating	2.5 mph	76
	Creep	95
	Stationary	95
20.5R25 1Star Rating	2.5 mph	83
	Creep	83
	Stationary	87

PONTOON LOADINGS

Carga Máxima en el Flotador	Maximum Pontoon Ground Bearing Pressure:
50,600 lb	208 psi

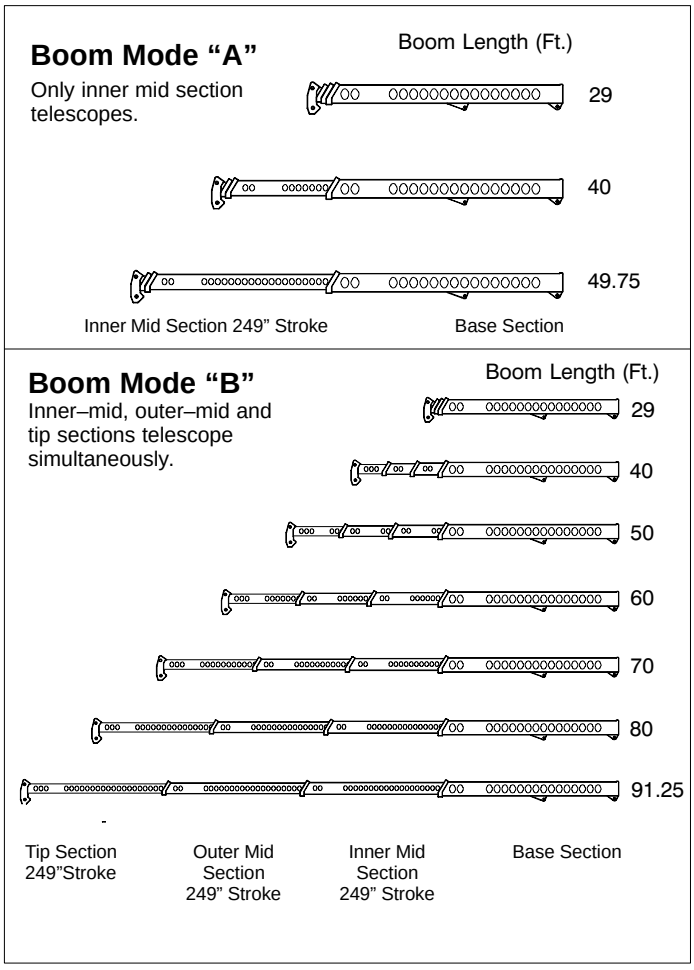

WINCH PERFORMANCE

Winch Line Pulls			Drum Rope Capacity (Ft.)	
	Two Speed Winch			
Wire Rope Layer	Low Speed Available Lbs.*	High Speed Available Lbs.	Layer	Total
1	11,948	6,125	77	77
2	10,807	5,540	84	161
3	9,866	5,058	93	254
4	9,075	4,652	101	355
5	8,401	4,307	109	464
* Maximum lifting capacity: Type DB Rope = 11,770 Type RB Rope = 9,080				

WIRE ROPE CAPACITY

Maximum Lifting Capacities Based On Wire Rope Strength			
Parts of Line	5/8” Type DB	5/8” Type RB	Notes
1	11,770	9,080	Capacities shown are in pounds and working loads must not exceed the ratings on the capacity charts in the Crane Rating Manual. Study Operator’s Manual for wire rope inspection procedures and single part of line application.
2	23,540	18,160	
3	35,310	27,240	
4	47,080	36,320	
5	58,850	45,400	
6	70,620	54,480	
7	82,390	63,560	

LBCE	DESCRIPTION
Type DB	6 X 26 (6 X 19 Class) – Warrington Seale – Extra Improved Plow Steel – Preformed – Right Regular Lay – I.W.R.C.
Type RB	18 X 19 Rotation Resistant – Compacted Strand – High Strength, Preformed, Right Regular Lay

HYDRAULIC CIRCUIT PRESSURE SETTINGS

Function	Pressure (psi)
Front And Rear Winch	3500
Outrigger	3000
Boom Hoist/ Telescope	3500
Swing	1600
Steering	2700
Pilot Control	500
Throttle	150

WORKING AREAS

RTC On Outriggers

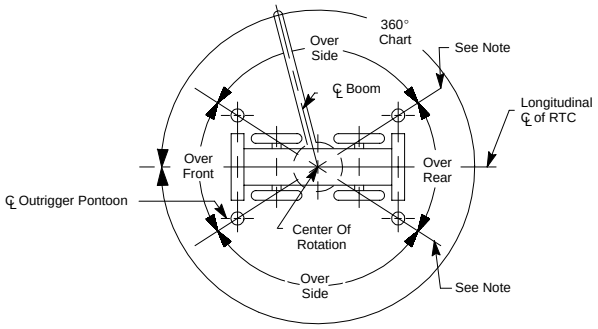

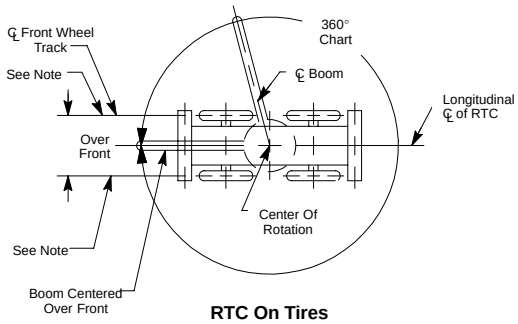

RTC On Tires

Note: These Lines Determine The Limiting Position Of Any Load For Operation Within Working Areas Indicated.

CAPACITY DEDUCTIONS FOR AUXILIARY LOAD HANDLING EQUIPMENT

Load Handling Equipment	Weight (lbs)
Auxiliary Head Attached	75
30 Ton Quick Reeve 3 Sheave Hook Block (See Hook Block For Actual Weight)	720
8.5 Ton Hook Ball (See Hook Ball For Actual Weight)	360

Lifting From Main Boom With:	
Fly Stowed On Boom Base (See Operation Note 4)	0
25 Ft. Fixed Fly Erected But Not Used	1300
27 Ft. Offset Fly Erected But Not Used	2300
44 Ft. Offset Fly Erected But Not Used	4300

Lifting From 27 Ft. Offset Fly With:	
17 Ft. Fly Tip Erected But Not Used	**PROHIBITED**
17 Ft. Fly Tip Stowed On 27 Ft. Offset Fly	**PROHIBITED**

Note: Capacity deductions are for Link–Belt supplied equipment only.

WORKING RANGE DIAGRAM

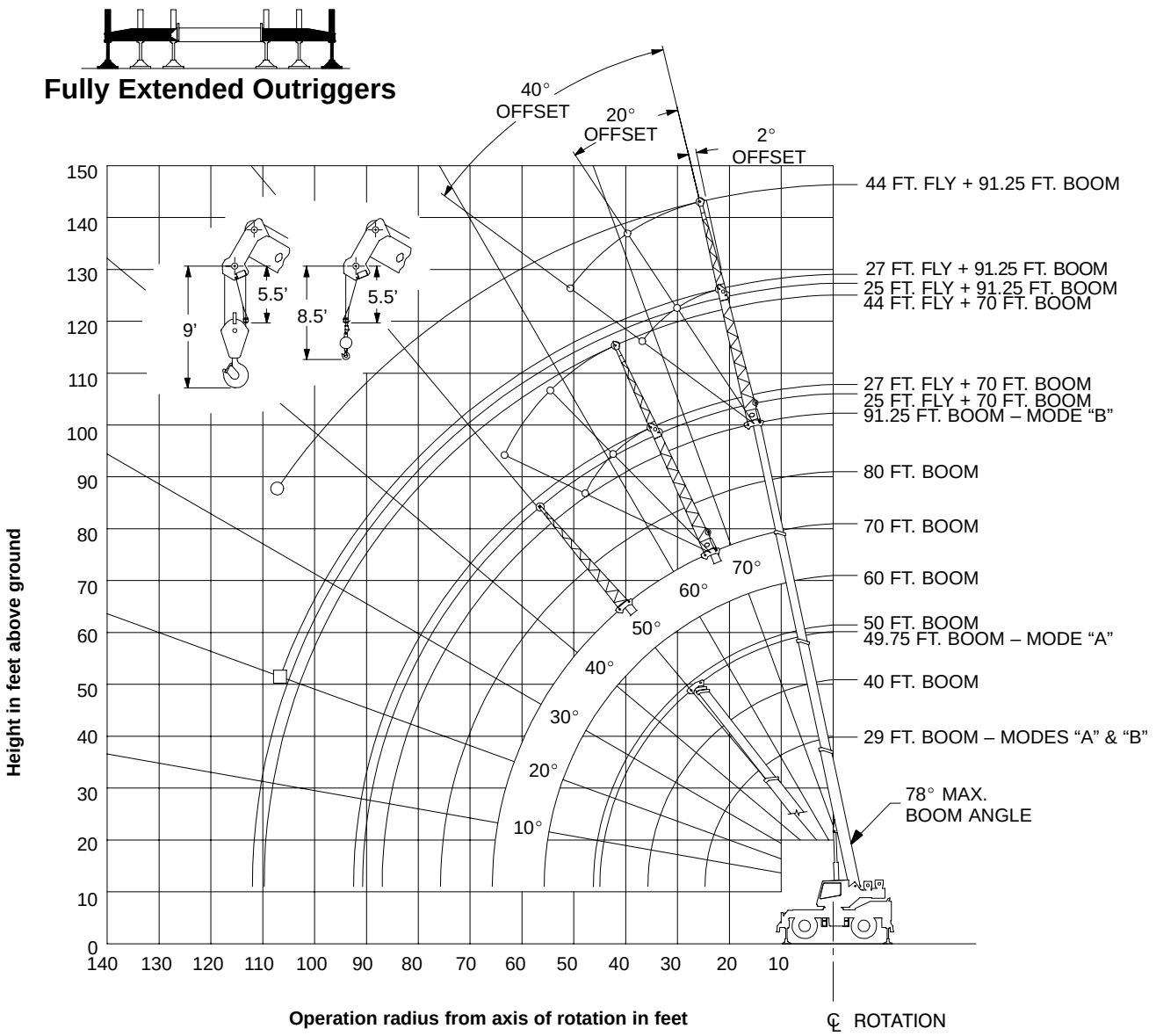

○ **Denotes Main Boom + 44 Ft. Offset Fly – Boom Mode "B"**
□ **Denotes Main Boom + 27 Ft. Offset Fly – Boom Mode "B"**

Note: Boom and fly geometry shown are for unloaded condition and crane standing level on firm supporting surface. Boom deflection, subsequent radius and boom angle change must be accounted for when applying load to hook.

⚠ WARNING

Do Not Lower The Boom Below The Minimum Boom Angle For No Load Stability As Shown In The Lift Charts For The Boom Lengths Given. Loss Of Stability Will Occur Causing A Tipping Condition.

Rated Lifting Capacities In Pounds
Fully Extended Outriggers
See Set Up Note 2

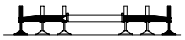

FULL

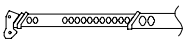

MAIN BOOM "A"

Load Radius (Ft.)	29 Ft.			40 Ft.			50 Ft.		
	∡ °	360°	Over Front	∡ °	360°	Over Front	∡ °	360°	Over Front
10	64.5	60,000	60,000	72.5	50,100	50,100	76.0	31,300	31,300
12	60.0	52,300	52,300	69.5	47,600	47,600	74.0	31,300	31,300
15	52.5	43,000	43,000	64.5	40,600	40,600	70.5	31,300	31,300
20	37.0	31,200	31,200	56.0	30,900	30,900	64.0	27,600	27,600
25				46.0	23,300	23,300	57.0	22,900	22,900
30				34.5	18,300	18,300	49.5	18,100	18,100
35				14.5	14,600	14,600	41.0	14,500	14,500
40							30.5	11,200	11,200
45							11.5	8,700	8,800
Min.Bm Ang./ Cap.	0 (24.8)	22,400	22,400	0 (35.8)	14,100	14,100	0 (45.5)	8,500	8,500

Note: Refer To Page 5 For "Capacity Deductions For Load Handling Equipment."
∡ ° Loaded Boom Angle In Degrees. ( ) Reference Radius For Minimum Boom Angle Capacities (Shown in Parenthesis) Are In Feet. *This Capacity Based On Maximum Obtainable Boom Angle.

Rated Lifting Capacities In Pounds
Fully Extended Outriggers
See Set Up Note 2

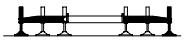

FULL

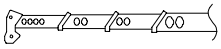

MAIN BOOM "B"

Load Radius (Ft.)	29 Ft.			40 Ft.			50 Ft.		
	∡ °	360°	Over Front	∡ °	360°	Over Front	∡ °	360°	Over Front
10	64.5	60,000	60,000	72.0	25,000	25,000	76.0	25,000	25,000
12	60.0	52,300	52,300	69.0	25,000	25,000	74.0	25,000	25,000
15	52.5	43,000	43,000	64.5	25,000	25,000	70.5	25,000	25,000
20	37.0	31,200	31,200	56.0	25,000	25,000	64.0	25,000	25,000
25				46.0	24,300	24,300	57.0	24,600	24,600
30				34.0	19,200	19,200	49.5	19,500	19,500
35				14.5	15,500	15,500	41.0	15,900	15,900
40							30.5	12,700	12,700
45							13.0	10,200	10,200
Min.Bm Ang./ Cap.	0 (24.8)	22,400	22,400	0 (35.8)	13,500	13,500	0 (45.8)	9,500	9,500

Load Radius (Ft.)	60 Ft.			70 Ft.		
	∡ °	360°	Over Front	∡ °	360°	Over Front
12	76.5	25,000	25,000			
15	74.5	25,000	25,000	77.0	25,000	25,000
20	69.0	25,000	25,000	73.0	25,000	25,000
25	64.0	24,200	24,200	68.5	22,700	22,700
30	58.0	19,700	19,700	64.0	19,100	19,100
35	52.0	16,100	16,100	59.0	16,200	16,200
40	45.5	12,900	12,900	54.0	13,000	13,000
45	37.5	10,400	10,500	48.5	10,500	10,600
50	28.0	8,600	8,600	42.0	8,700	8,700
55	12.0	7,100	7,100	35.0	7,200	7,300
60				26.0	6,100	6,100
65				11.5	5,100	5,100
Min.Bm. Ang./Cap.	0 (55.8)	6,900	6,900	0 (65.8)	4,900	5,000

Load Radius (Ft.)	80 Ft.			91.25 Ft.		
	∡ °	360°	Over Front	∡ °	360°	Over Front
20	76.0	25,000	25,000	78.0*	19,000	19,000
25	72.0	21,400	21,400	75.0	19,000	19,000
30	68.5	18,100	18,100	72.0	16,800	16,800
35	64.5	15,500	15,500	68.5	14,700	14,700
40	60.0	13,000	13,100	65.0	12,800	12,800
45	55.5	10,600	10,700	61.0	10,700	10,700
50	50.5	8,800	8,800	57.0	8,800	8,900
55	45.5	7,300	7,400	53.0	7,400	7,400
60	39.5	6,100	6,200	48.5	6,200	6,300
65	33.0	5,200	5,200	44.0	5,200	5,300
70	25.0	4,400	4,400	39.0	4,400	4,500
75	11.0	3,700	3,700	33.0	3,800	3,800
80				26.0	3,200	3,300
85				15.0	2,700	2,700
Min.Bm. Ang./Cap.	0 (75.8)	3,600	3,600	0 (87.0)	2,500	2,500

Note: Refer To Page 5 For "Capacity Deductions For Load Handling Equipment."
∡ ° Loaded Boom Angle In Degrees. ( ) Reference Radius For Minimum Boom Angle Capacities (Shown in Parenthesis) Are In Feet. *This Capacity Based On Maximum Obtainable Boom Angle.

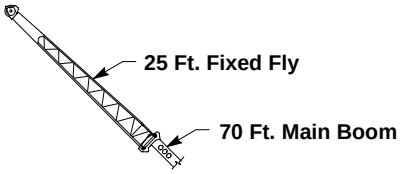

Rated Lifting Capacities In Pounds
Fully Extended Outriggers
See Set Up Note 2

FULL

Load Radius (Ft.)	∡°	360°
20	78.0*	15,200
25	75.0	13,500
30	72.0	12,200
35	68.5	10,600
40	65.5	9,800
45	62.0	9,100
50	58.5	8,200
55	55.0	7,500
60	51.0	7,000
65	46.5	6,100
70	42.0	5,300
75	36.5	4,600
80	30.5	4,000
85	23.0	3,500
90	10.5	3,000
Min.Bm. Ang./Cap.	0	2,900

Note: Refer To Page 5 For "Capacity Deductions For Auxiliary Load Handling Equipment". ∡° Loaded Boom Angle In Degrees. * This Capacity Based On Maximum Obtainable Boom Angle.

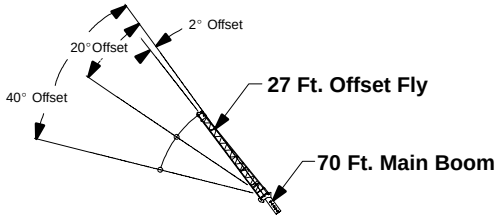

Rated Lifting Capacities In Pounds
Fully Extended Outriggers
See Set Up Note 2

FULL

Load Radius (Ft.)	2° Offset		20° Offset		40° Offset	
	∡°	360°	∡°	360°	∡°	360°
25	75.5	13,000				
30	72.5	11,000	77.0	7,700		
35	69.0	10,100	73.5	7,100	78.0*	5,300
40	66.0	9,300	70.5	6,500	74.5	5,000
45	62.5	8,400	67.0	6,100	71.0	4,800
50	59.5	7,600	63.5	5,700	67.5	4,600
55	55.5	6,900	60.0	5,400	63.5	4,500
60	52.0	6,400	56.5	5,100	59.5	4,400
65	48.0	5,800	52.0	4,800	55.5	4,200
70	43.5	5,000	48.0	4,600	50.5	4,200
75	38.5	4,300	43.0	4,400	45.5	4,100
80	32.5	3,700	37.0	3,900		
85	26.0	3,200	30.0	3,300		
90	16.5	2,800				
Min. Bm. Ang./Cap.	0	2,400	0	2,500	0	2,700

Note: Refer To Page 5 For "Capacity Deductions For Auxiliary Load Handling Equipment". ∡° Loaded Boom Angle In Degrees. * This Capacity Based On Maximum Obtainable Boom Angle.

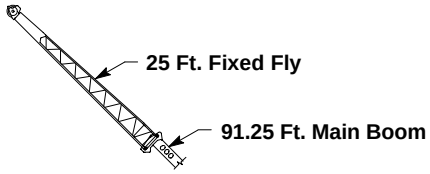

Rated Lifting Capacities In Pounds
Fully Extended Outriggers
See Set Up Note 2

FULL

Load Radius (Ft.)	∡°	360°
30	76.5	10,200
35	74.5	10,200
40	72.0	9,800
45	69.5	9,200
50	67.0	8,400
55	64.0	7,700
60	61.0	6,900
65	58.0	5,900
70	54.5	5,100
75	51.0	4,400
80	47.5	3,800
85	43.5	3,300
90	39.5	2,900
95	35.0	2,500
100	29.5	2,100
105	23.5	1,800
110	14.0	1,500
Min.Bm. Ang./Cap.	0	1,400

Note: Refer To Page 5 For "Capacity Deductions For Auxiliary Load Handling Equipment". ∡° Loaded Boom Angle In Degrees.

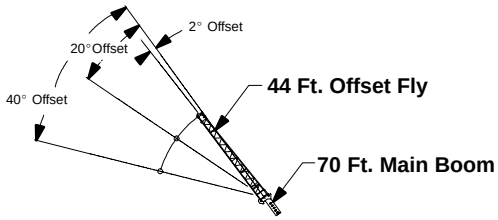

Rated Lifting Capacities In Pounds
Fully Extended Outriggers
See Set Up Note 2

FULL

Load Radius (Ft.)	2° Offset		20° Offset		40° Offset	
	∡°	360°	∡°	360°	∡°	360°
30	76.0	7,400				
35	73.5	6,600				
40	70.5	5,800	77.0	4,000		
45	68.0	5,300	74.5	3,700		
50	65.0	4,800	71.5	3,500	78.0*	2,700
55	62.5	4,300	69.0	3,200	75.0	2,500
60	59.5	4,000	66.0	3,000	72.0	2,400
65	56.5	3,700	63.0	2,900	68.5	2,300
70	53.5	3,400	59.5	2,700	65.5	2,300
75	50.0	3,100	56.5	2,600	61.5	2,200
80	46.5	2,900	52.5	2,400	57.5	2,100
85	42.5	2,700	49.0	2,300	53.5	2,100
90	38.5	2,600	44.5	2,200	48.5	2,100
95	34.0	2,400	40.0	2,200	43.0	2,100
100	28.5	2,300	34.0	2,100		
105	21.0	2,000	26.0	2,100		
Min.Bm. Ang./Cap.	0	1,500	0	1,600	0	1,800

Note: Refer To Page 5 For "Capacity Deductions For Auxiliary Load Handling Equipment". ∡° Loaded Boom Angle In Degrees. * This Capacity Based On Maximum Obtainable Boom Angle.

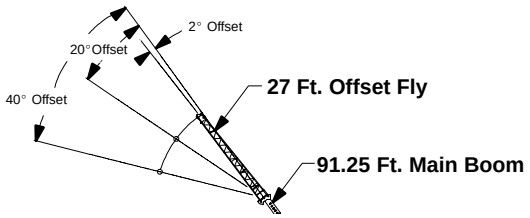

Rated Lifting Capacities In Pounds
Fully Extended Outriggers
See Set Up Note 2

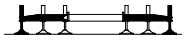

FULL

Load Radius (Ft.)	2° Offset		20° Offset		40° Offset	
	∡°	360°	∡°	360°	∡°	360°
30	77.0	9,900				
35	75.0	9,700	78.0*	7,200		
40	72.5	9,300	76.0	6,800		
45	70.0	8,600	73.5	6,400	76.5	5,000
50	67.5	7,800	71.0	6,100	74.0	4,800
55	64.5	7,200	68.0	5,800	71.0	4,600
60	62.0	6,600	65.5	5,500	68.5	4,500
65	58.5	5,600	62.5	5,200	65.5	4,400
70	55.5	4,800	59.5	5,000	62.5	4,300
75	52.0	4,100	56.5	4,400	59.0	4,200
80	48.5	3,500	52.5	3,800	55.5	4,000
85	45.0	3,000	49.0	3,200	51.5	3,400
90	41.0	2,600	45.0	2,800	47.0	2,900
95	36.5	2,200	40.5	2,300	42.0	2,400
100	31.5	1,800	35.5	2,000		
105	26.0	1,500	29.0	1,600		
110			21.0	1,300		

WARNING

Do Not Lower 27 Ft. Offset Fly In Working Position Below 20° Main Boom Angle Unless Main Boom Length Is 87 Ft. Or Less, Since Loss Of Stability Will Occur Causing A Tipping Condition.

Note: Refer To Page 5 For "Capacity Deductions For Auxiliary Load Handling Equipment". ∡° Loaded Boom Angle In Degrees. * This Capacity Based On Maximum Obtainable Boom Angle.

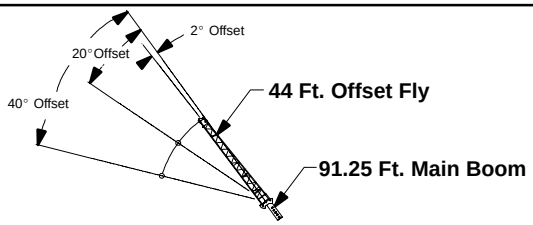

Rated Lifting Capacities In Pounds
Fully Extended Outriggers
See Set Up Note 2

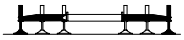

FULL

Load Radius (Ft.)	2° Offset		20° Offset		40° Offset	
	∡°	360°	∡°	360°	∡°	360°
35	77.5	6,500				
40	75.5	6,000				
45	73.5	5,500				
50	71.0	5,100	76.5	3,600		
55	69.0	4,700	74.0	3,400		
60	66.5	4,400	72.0	3,200	77.0	2,500
65	64.5	4,100	69.5	3,100	74.5	2,400
70	62.0	3,800	67.0	2,900	72.0	2,300
75	59.5	3,600	64.5	2,800	69.5	2,300
80	57.0	3,400	62.0	2,700	66.5	2,200
85	54.5	3,200	59.5	2,500	64.0	2,200
90	51.5	2,800	56.5	2,400	61.0	2,100
95	48.0	2,400	54.0	2,400	57.5	2,100
100	45.0	2,000	50.5	2,300	54.5	2,100
105	41.5	1,700	47.0	2,000	50.5	2,100
110	37.5	1,400	43.0	1,700	46.0	1,800
115			38.5	1,400	40.5	1,500

WARNING

Do Not Lower 44 Ft. Offset Fly In Working Position Below 34.5° Main Boom Angle Unless Main Boom Length Is 80 Ft. Or Less, Since Loss Of Stability Will Occur Causing A Tipping Condition.

Note: Refer To Page 5 For "Capacity Deductions For Auxiliary Load Handling Equipment". ∡° Loaded Boom Angle In Degrees.

WORKING RANGE DIAGRAM

ON TIRES

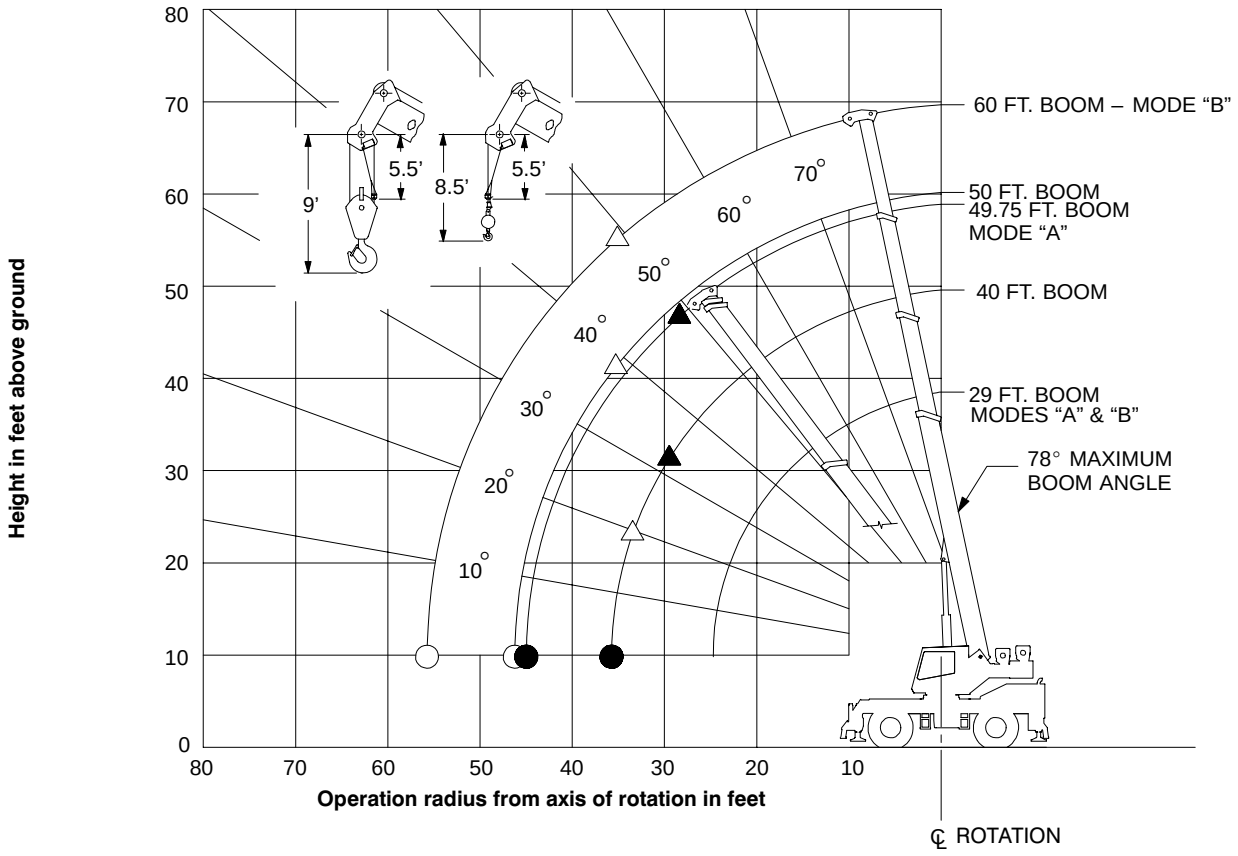

Crane Configurations Prohibited:
Boom Lengths Greater than 60 FT.
25 Ft. Fixed Fly
27 Ft. Offset Fly
44 Ft. Offset Fly

▲ **Denotes Main Boom 360° – Boom Mode "A"**
△ **Denotes Main Boom 360° – Boom Mode "B"**
● **Denotes Main Boom Between Tire Tracks Or Centered Over Front – Boom Mode "A"**
○ **Denotes Main Boom Between Tire Tracks Or Centered Over Front – Boom Mode "B"**

Note: Boom geometry shown is for unloaded condition and crane standing level on firm supporting surface. Boom deflection, subsequent radius and boom angle change must be accounted for when applying load to hook.

⚠ WARNING

Do Not Lower The Boom Below The Minimum Boom Angle For No Load Stability As Shown In The Lift Charts For The Boom Lengths Given. Loss Of Stability Will Occur Causing A Tipping Condition.

On Tire Capacities In Pounds
Tire Pressure: See Page 5
Stationary Capacities
Over Front Between Tire Tracks
See Operation Note 20

ON TIRES

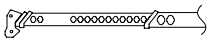

MAIN BOOM "A"

Load Radius (Ft.)	29 Ft.		40 Ft.		49.75 Ft.	
	∡°	Load	∡°	Load	∡°	Load
10	64.5	32,800				
12	59.5	28,900	69.0	28,600		
15	52.0	24,300	64.0	24,000		
20	37.0	17,400	55.5	17,100	63.5	16,800
25			46.0	11,400	56.5	11,200
30			34.0	8,000	49.0	7,900
35			14.0	5,700	40.5	5,600
40					30.0	4,000
45					11.0	2,800
Min.Bm. Ang./ Cap.	0 (24.8)	11,700	0 (35.8)	5,400	0 (45.5)	2,700

Note: Refer To Page 5 For "Capacity Deductions For Auxiliary Load Handling Equipment". ∡° Loaded Boom Angle In Degrees. ( ) Reference Radius For Minimum Boom Angle Capacities (Shown In Parenthesis) Are In Feet.

On Tire Capacities In Pounds
Tire Pressure: See Page 5
Pick & Carry Capacities
(1 MPH) Boom Centered Over Front
See Operation Note 20

ON TIRES

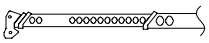

MAIN BOOM "A"

Load Radius (Ft.)	29 Ft.			40 Ft.			49.75 Ft.		
	∡°	Creep	2.5 mph	∡°	Creep	2.5 mph	∡°	Creep	2.5 mph
10	64.5	31,900	22,200						
12	59.5	27,600	19,000	69.0	27,300	18,700			
15	52.0	22,700	15,300	64.0	22,500	15,000			
20	37.0	17,000	11,000	55.5	16,800	10,800	63.5	16,700	10,700
25				46.0	11,400	7,900	56.5	11,200	7,800
30				34.0	8,000	5,800	49.0	7,900	5,700
35				14.0	5,700	4,200	40.5	5,600	4,200
40							30.0	4,000	2,900
45							11.0	2,800	1,900
Min.Bm Ang./ Cap	0 (24.8)	11,700	8,100	0 (35.8)	5,400	4,000	0 (45.5)	2,700	1,800

Note: Refer To Page 5 For "Capacity Deductions For Auxiliary Load Handling Equipment". ∡° Loaded Boom Angle In Degrees. ( ) Reference Radius For Minimum Boom Angle Capacities (Shown In Parenthesis) Are In Feet.

On Tire Capacities In Pounds
Tire Pressure: See Page 5
Stationary Capacities
Over Front Between Tire Tracks
See Operation Note 20

ON TIRES

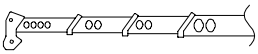

MAIN BOOM "B"

Load Radius (Ft.)	29 Ft.		40 Ft.	
	∡°	Load	∡°	Load
10	64.5	32,800	72.0	25,000
12	59.5	28,900	69.0	25,000
15	52.0	24,300	64.0	24,800
20	37.0	17,400	55.5	18,100
25			46.0	12,300
30			34.0	8,800
35			14.0	6,500
Min.Bm. Ang./Cap.	0 (24.8)	11,700	0 (35.8)	6,200
Load Radius (Ft.)	50 Ft.		60 Ft.	
	∡°	Load	∡°	Load
20	63.5	18,300		
25	56.5	12,600	63.5	12,700
30	49.0	9,200	57.5	9,300
35	40.5	6,900	51.5	7,100
40	30.0	5,200	45.0	5,400
45	12.5	4,000	37.0	4,200
50			27.5	3,200
55			11.5	2,500
Min.Bm. Ang./Cap.	0 (45.8)	3,800	0 (55.8)	2,300

Note: Refer To Page 5 For "Capacity Deductions For Auxiliary Load Handling Equipment". ∡° Loaded Boom Angle In Degrees. ( ) Reference Radius For Minimum Boom Angle Capacities (Shown In Parenthesis) Are In Feet.

On Tire Capacities In Pounds
Tire Pressure: See Page 5
Pick & Carry Capacities
(1 MPH) Boom Centered Over Front
See Operation Note 20

ON TIRES

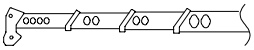

MAIN BOOM "B"

Load Radius (Ft.)	29 Ft.			40 Ft.		
	∡°	Creep	2.5 mph	∡°	Creep	2.5 mph
10	64.5	31,900	22,200	72.0	25,000	22,500
12	59.5	27,600	19,000	69.0	25,000	19,400
15	52.0	22,700	15,300	64.0	23,200	15,800
20	37.0	17,000	11,000	55.5	17,500	11,600
25				46.0	12,300	8,700
30				34.0	8,800	6,600
35				14.0	6,500	5,000
Min.Bm Ang./ Cap.	0 (24.8)	11,700	8,100	0 (35.8)	6,200	4,800
Load Radius (Ft.)	50 Ft.			60 Ft.		
	∡°	Creep	2.5 mph	∡°	Creep	2.5 mph
20	63.5	17,800	11,800			
25	56.5	12,600	9,000	63.5	12,700	9,100
30	49.0	9,200	6,900	57.5	9,300	7,100
35	40.5	6,900	5,300	51.5	7,100	5,500
40	30.0	5,200	4,100	45.0	5,400	4,300
45	12.5	4,000	3,100	37.0	4,200	3,300
50				27.5	3,200	2,500
55				11.5	2,500	1,800
Min.Bm. Ang./ Cap.	0 (45.8)	3,800	2,900	0 (55.8)	2,300	1,700

Note: Refer To Page 7 For "Capacity Deductions For Auxiliary Load Handling Equipment". ∡° Loaded Boom Angle In Degrees. * This Capacity Based On Maximum Obtainable Boom Angle.

On Tire Capacities In Pounds
Tire Pressure: See Page 5
Stationary Capacities – 360 Degree
See Operation Note 20

360°

ON TIRES

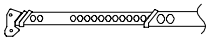

MAIN BOOM "A"

Load Radius (Ft.)	29 Ft.		40 Ft.		49.75 Ft.	
	∡°	Load	∡°	Load	∡°	Load
10	64.5	24,000				
12	59.5	17,700	69.0	17,200		
15	52.0	12,000	64.0	11,700		
20	37.0	7,000	55.5	6,800	63.0	6,700
25			46.0	4,100	56.5	4,000
30			34.0	2,300	49.0	2,200
Min.Bm Ang./ Cap.	0 (24.8)	4,200	26.5 (32.3)	—	45.5 (31.9)	—

Note: Refer To Page 5 For "Capacity Deductions For Auxiliary Load Handling Equipment". ∡° Loaded Boom Angle In Degrees. ( ) Reference Radius For Minimum Boom Angle Capacities (Shown In Parenthesis) Are In Feet.

On Tire Capacities In Pounds
Tire Pressure: See Page 5
Stationary Capacities–360 Degree
See Operation Note 20

360°

ON TIRES

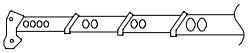

MAIN BOOM "B"

Load Radius (Ft.)	29 Ft.		40 Ft.	
	∡°	Load	∡°	Load
10	64.0	24,000	72.0	24,400
12	59.5	17,700	69.0	18,200
15	52.0	12,000	64.0	12,700
20	37.0	7,000	55.5	7,700
25			45.5	4,900
30			34.0	3,100
35			14.0	1,800
Min.Bm. Ang./Cap.	0 (24.8)	4,200	0 (35.8)	1,700
Load Radius (Ft.)	50 Ft.		60 Ft.	
	∡°	Load	∡°	Load
20	63.5	7,900		
25	56.5	5,200	63.0	5,300
30	49.0	3,400	57.0	3,600
35	40.5	2,200	51.0	2,400
Min.Bm. Ang./Cap.	34 (38.2)	—	45.5 (39.4)	—

Note: Refer To Page 5 For "Capacity Deductions For Auxiliary Load Handling Equipment". ∡° Loaded Boom Angle In Degrees. ( ) Reference Radius For Minimum Boom Angle Capacities (Shown In Parenthesis) Are In Feet.

® Link–Belt is a registered trademark. Copyright 1999. All rights reserved. We are constantly improving our products and therefore reserve the right to change designs and specifications.

Link-Belt
CONSTRUCTION EQUIPMENT

Lifting Capacities

Telescopic Rough Terrain Crane

RTC–8030 *Series II* 30–ton *(27.2 metric ton)*

Three–Section Boom Capacities

Boom and fly capacities for this machine are listed by the following sections:

Fully Extended Outriggers
- Working Range Diagram
- 30 to 78 ft. Main Boom capacities
- 25 ft. offset fly capacities
- 27 ft. offset fly capacities
- 27 to 44 ft. two–piece offset fly capacities

On–Tires
- Working Range Diagram
- 30 to 78 ft. Main Boom capacities

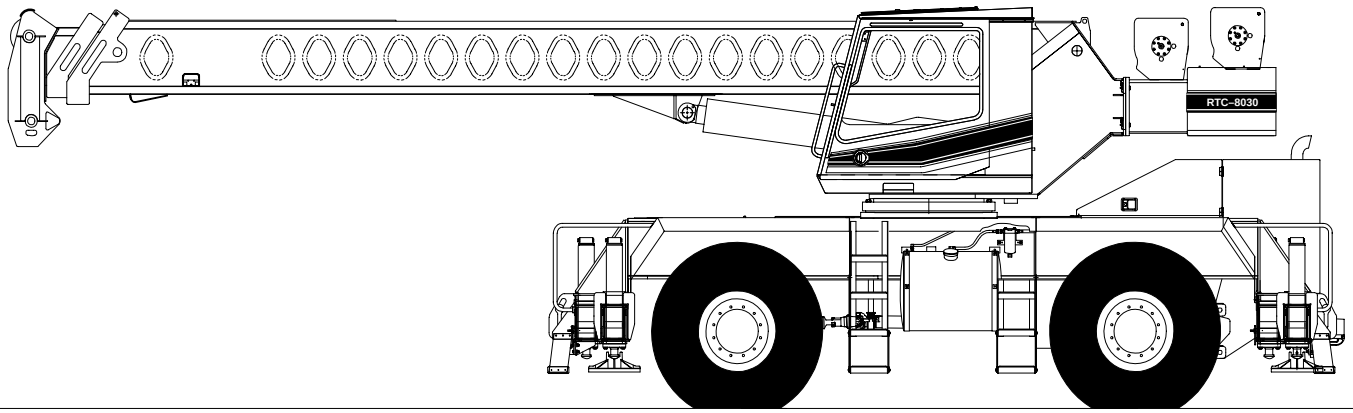

CAUTION: This material is supplied for reference use only. Operator must refer to in–cab Crane Rating Manual to determine allowable machine lifting capacities and operating procedures.

Litho in U.S.A. 2/02

#6301 (supersedes #6252)

⚠ WARNING

READ AND UNDERSTAND THE OPERATOR'S AND SAFETY MANUALS AND THE FOLLOWING INSTRUCTIONS AND RATED LIFTING CAPACITIES BEFORE OPERATING THE CRANE. OPERATION WHICH DOES NOT FOLLOW THESE INSTRUCTIONS MAY RESULT IN AN ACCIDENT.

OPERATING INSTRUCTIONS

GENERAL:

1. Rated lifting capacities in pounds as shown on lift charts pertain to this crane as originally manufactured and normally equipped. Modifications to the crane or use of optional equipment other than that specified can result in a reduction of capacity.
2. Construction equipment can be dangerous if improperly operated or maintained. Operation and maintenance of this crane must be in compliance with the information in the Operator's, Parts, and Safety Manuals supplied with this crane. If these manuals are missing, order replacements through the distributor.
3. The operator and other personnel associated with this crane shall read and fully understand the latest applicable American National Standards ASME B30.5 safety standards for cranes.
4. The rated lifting capacities are based on crane standing level on firm supporting surface.

SET UP:

1. The crane shall be leveled on a firm supporting surface. Depending on the nature of the supporting surface, it may be necessary to have structural supports under the outrigger pontoons or tires to spread the load to a larger bearing surface.
2. When making lifts on outriggers, all tires must be free of supporting surface. All outrigger beams must be extended to the same length; fully retracted, intermediate extended, or fully extended.
3. When operating on tires over the side, do not exceed 75° maximum boom angle. Loss of backward stability will occur causing a backward tipping condition.
4. When making lifts on tires, they must be inflated to the recommended pressure. (See Operation note 20 and Tire Inflation.)
5. For required parts of line, see Wire Rope Capacity and Winch Performance.
6. Before setting up on intermediate outriggers, retracted outriggers, or tires, refer to Working Range Diagrams and rated lifting capacities to determine allowable crane configurations.

OPERATION:

1. Rated lifting capacities at rated radii shall not be exceeded. Do not tip the crane to determine allowable loads. For concrete bucket operation, weight of bucket and load shall not exceed 80% of rated lifting capacities. For clamshell bucket operation, weight of bucket and bucket contents is restricted to a maximum weight of 5000 pounds or 80% of rated lifting capacity, whichever is less. For magnet operation, weight of magnet and load is restricted to a maximum weight of 5000 pounds or 80% of rated lifting capacity, whichever is less. For clamshell and magnet operation, maximum boom length is restricted to 40 feet and the boom angle is restricted to a minimum of 35 degrees. Lifts with any fly erected are prohibited for both clam and magnet operation.
2. Rated lifting capacities shown on fully extended outriggers do not exceed 85% of the tipping loads. Rated lifting capacities shown on intermediate extended or fully retracted outriggers are determined by the formula, rated load = (tipping load – 0.1 X load factor) / 1.25. Rated lifting capacities shown on tires do not exceed 75% of the tipping loads. Tipping loads are determined by SAE crane stability test code J–765.
3. Rated lifting capacities in the shaded areas are based on structural strength or hydraulic limitations and have been tested to meet minimum requirements of SAE J–1063 cantilevered boom crane structures—method of test. Rated lifting capacities in the non—shaded areas are based on stability ratings. Some capacities are limited by a maximum obtainable 78° boom angle.
4. Rated lifting capacities include the weight of hook ball/block, slings, bucket, magnet and auxiliary lifting devices. Their weights must be subtracted from the listed rated capacity to obtain the net load that can be lifted. Rated lifting capacities include the deduct for any fly stowed on the base of the boom. For deducts of any fly erected, but not used, see Capacity Deductions For Auxiliary Load Handling Equipment.
5. Rated lifting capacities are based on freely suspended loads. No attempt shall be made to move a load horizontally on the ground in any direction.
6. Rated lifting capacities are for lift crane service only.
7. Do not operate at radii or boom lengths (minimum or maximum) where capacities are not listed. At these positions, the crane can tip or cause boom failure.
8. The maximum loads that can be telescoped are not definable because of variation in loadings and crane maintenance, but it is permissible to attempt retraction and extension within the limits of the applicable load rating chart.

9. For main boom capacities when either boom length or radius or both are between values listed, proceed as follows:
   a. For boom lengths not listed, use rating for next longer boom length or next shorter boom length, whichever is smaller.
   b. For load radii not listed, use rating for next larger radius.
10. The user shall operate at reduced ratings to allow for adverse job conditions, such as: soft or uneven ground, out of level conditions, wind, side loads, pendulum action, jerking or sudden stopping of loads, hazardous conditions, experience of personnel, traveling with loads, electrical wires, etc. Side load on boom or fly is dangerous and shall be avoided.
11. Rated lifting capacities do not account for wind on suspended load or boom. Rated capacities and boom length shall be appropriately reduced as wind velocity approaches 20 mph.
12. When making lifts with auxiliary head machinery, the effective length of the boom increases by 2 ft.
13. Power sections of boom must be extended equally. (Stroke of center and tip sections is 24 ft. for each section).
14. The least stable rated working area depends on the configuration of the crane set up.
15. Rated lifting capacities are based on correct reeving. Deduction must be made for excessive reeving. Any reeving over minimum required (see Wire Rope Capacity) is considered excessive and must be accounted for when making lifts. Use Working Range Diagram to estimate the extra feet of rope then deduct 1 lb. for each extra foot of wire rope before attempting to lift a load.
16. The loaded boom angle combined with the boom length give only an approximation of the operating radius. The boom angle, before loading, should be greater to account for deflection. For main boom capacities, the loaded boom angle is for reference only. For fly capacities, the load radius is for reference only.
17. For fly capacities with main boom length less than 78 ft., the rated capacities are determined by the boom angle using the 78 ft. boom and fly chart. For angles not shown use the next lower boom angle to determine the rated capacity.
18. The 30ft. boom length structural capacities are based on boom fully retracted. If the boom is not fully retracted, do not exceed capacities shown for the 40 ft. boom length.
19. Rated lifting capacities on tires depend on tire capacity, condition of tires, and tire air pressure. On tire capacities require lifting from main boom head only on a smooth and level surface. Pick and carry operations are restricted to speed of 2.5 mph and creep. The boom must be centered over the front of the crane with two−position travel swing lock engaged and the load must be restrained from swinging. Lifts with any fly erected on tires are prohibited. For correct tire pressure, see Tire Inflation.

DEFINITIONS:

1. Load Radius: Horizontal distance from a projection of the axis of rotation to the supporting surface, before loading, to the center of the vertical hoist line or tackle with load applied.
2. Loaded Boom Angle: $\measuredangle^{\circ}$ The angle between the boom base section and horizontal with freely suspended load at the rated radius.
3. Working Area: Area measured in a circular arc about the center line of rotation as shown on the Working Area Diagram.
4. Freely Suspended Load: Load hanging free with no direct external force applied except by the hoist line.
5. Side Load: Horizontal side force applied to the lifted load either on the ground or in the air.
6. No Load Stability Limit: The radius or boom angle beyond which it is not permitted to position the boom because the crane can overturn without any load on the hook.
7. Load Factor: Load applied at the boom tip which gives the same moment effect as the boom mass.
8. Creep: Crane movement limited to 200 ft. in a 30 minute period and not to exceed 1 mph maximum speed.

TIRE INFLATION

Tire Size	Operation	Tire Pressure (psi)
20.5 X 25–24 Ply Rating	Stationary Creep 2.5 mph	95 95 76
20.5R25 – 1 Star Radial	Stationary Creep 2.5 mph	87 83 83

PONTOON LOADINGS

Maximum Pontoon Load:	Maximum Pontoon Ground Bearing Pressure:
50,600 lbs.	208 psi

CAPACITY DEDUCTIONS FOR AUXILIARY LOAD HANDLING EQUIPMENT

Load Handling Equipment:	(lbs.)
Auxiliary Head Attached	75
30–ton quick reeve 3 sheave hook block (see hook block for actual weight)	720
8.5–ton hook ball (see hook ball for actual weight)	360
Lifting From Main Boom With:	**(lbs.)**
Fly Stowed On Boom Base (See Operation Note 4)	0
25 Ft. Fixed Fly Erected But Not Used	1300
27 Ft. Offset Fly Erected But Not Used	3,300
44 Ft. Offset Fly Erected But Not Used	6,600
Lifting From 28.5 ft. Offset Fly With:	
17 ft. fly tip erected but not used	**PROHIBITED**
17 ft. fly tip stowed on 28.5 ft. offset fly	**PROHIBITED**

Note: Capacity deductions are for Link–Belt supplied equipment only.

WINCH PERFORMANCE

Wire Rope Layer	Winch Line Pulls: Two Speed Winch, Low Speed Available Lbs.*	Winch Line Pulls: Two Speed Winch, High Speed Available lbs.	Drum Rope Capacity (ft.): Layer	Drum Rope Capacity (ft.): Total
1	11,948	6,125	77	77
2	10,807	5,540	85	161
3	9,866	5,058	93	254
4	9,075	4,652	101	355
5	8,401	4,307	109	464

*Maximum lifting capacity: Type DB Rope = 11,770 Type RB Rope = 9,080

WIRE ROPE CAPACITY

Maximum Lifting Capacities Based On Wire Rope Strength			
Parts of Line	5/8" Type DB	5/8" Type RB	Notes
1	11,770	9,080	Capacities shown are in pounds and working loads must not exceed the ratings on the capacity charts in the Crane Rating Manual. Study Operator's Manual for wire rope inspection procedures.
2	23,540	18,160	
3	35,310	27,240	
4	47,080	36,320	
5	58,850	45,400	
6	70,620	54,480	
7	82,390	63,540	

LBCE	DESCRIPTION
TYPE DB	6 x 26 (6 x 19 Class) – Warrington Seale – Extra Improved Plow Steel – Preformed – Right Regular Lay – I.W.R.C.
TYPE RB	18 x 19 Rotation Resistant – Compacted Strand – High Strength – Preformed – Right Regular Lay

HYDRAULIC CIRCUIT PRESSURE SETTINGS

Function	Pressure (PSI)
Front And Rear Winch	3500
Outriggers	3000
Boom Hoist / Telescope	3500
Swing	1600
Steering	2700
Pilot Control	500
Throttle	150

WORKING AREAS

RTC On Outriggers

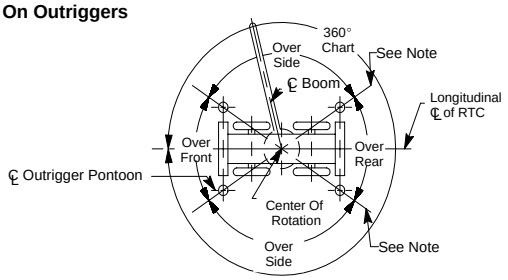

RTC On Tires

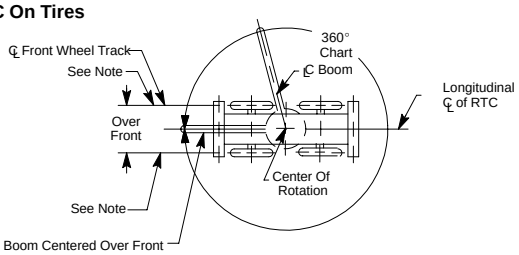

Note: These Lines Determine The Limiting Position Of Any Load For Operation Within Working Areas Indicated.

WORKING RANGE DIAGRAM

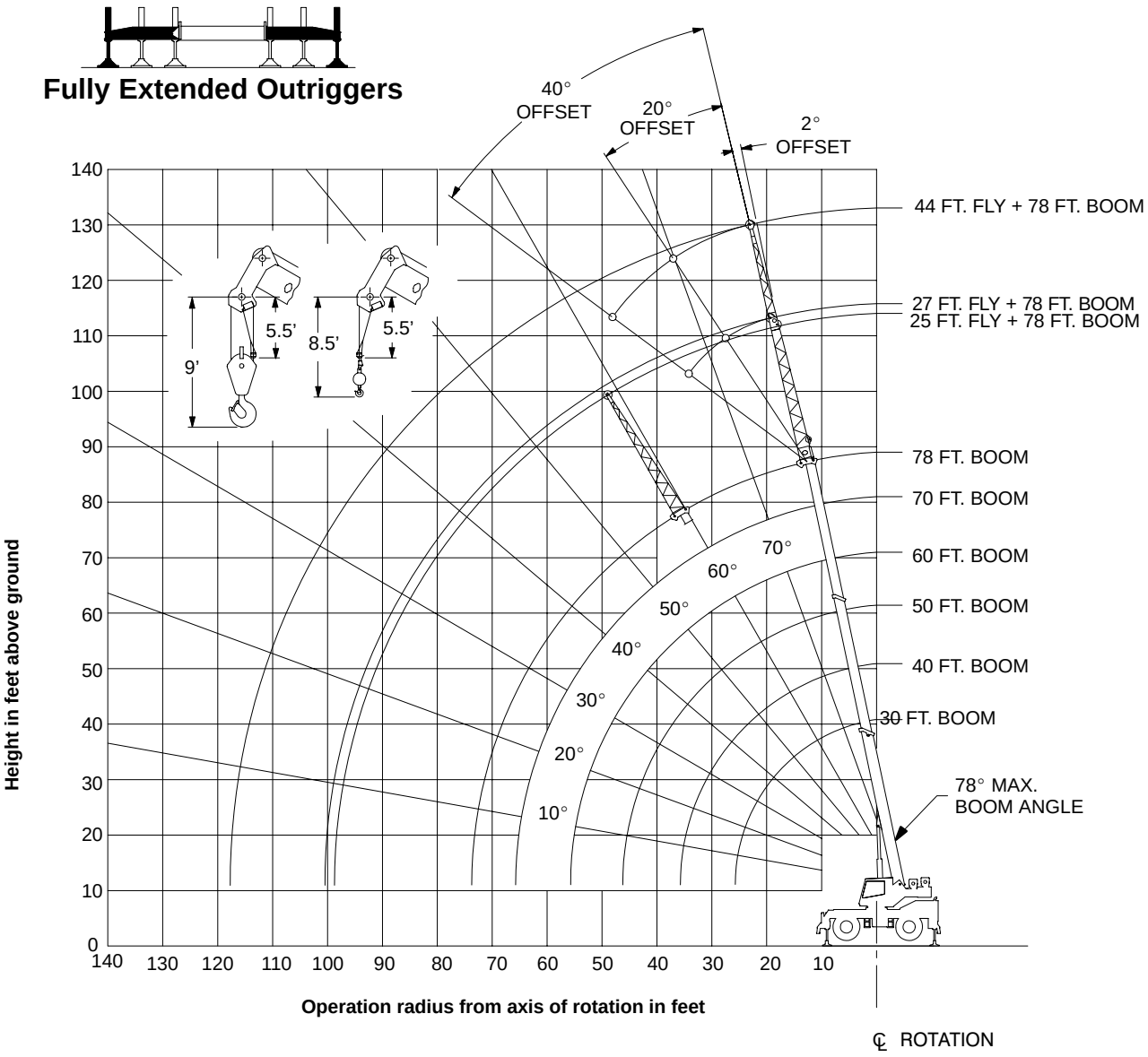

Note: Boom and fly geometry shown are for unloaded condition and crane standing level on firm supporting surface. Boom deflection, subsequent radius and boom angle change must be accounted for when applying load to hook.

⚠ WARNING

Do Not Lower The Boom Below The Minimum Boom Angle For No Load Stability As Shown In The Lift Charts For The Boom Lengths Given. Loss Of Stability Will Occur Causing A Tipping Condition.

Rated Lifting Capacities In Pounds
Fully Extended Outriggers.
See Set Up Note 2.

FULL

Load Radius (Ft.)	30 Ft. ∡ °	30 Ft. 360°	30 Ft. Over Front	40 Ft. ∡ °	40 Ft. 360°	40 Ft. Over Front	50 Ft. ∡ °	50 Ft. 360°	50 Ft. Over Front	Load Radius (Ft.)
10	66.0	60,000	60,000	72.5	49,900	49,900	76.5	48,500	48,500	10
12	61.5	53,100	53,100	69.5	48,800	48,800	74.5	44,100	44,100	12
15	54.5	43,500	43,500	64.5	43,100	43,100	70.5	38,500	38,500	15
20	40.5	31,200	31,200	56.0	31,800	31,800	64.5	32,100	32,100	20
25	17.5	23,700	23,700	46.5	24,300	24,300	57.5	24,700	24,700	25
30				34.5	19,400	19,400	50.0	19,800	19,800	30
35				15.0	15,100	15,100	41.5	15,400	15,400	35
40							31.0	12,200	12,300	40
45							13.0	9,900	10,000	45
Min.Bm Ang/ Cap	0 (25.8)	22,300	22,300	0 (35.8)	13,700	13,700	0 (45.8)	9,500	9,500	Min.Bm Ang/ Cap

Load Radius (Ft.)	60 Ft. ∡ °	60 Ft. 360°	60 Ft. Over Front	70 Ft. ∡ °	70 Ft. 360°	70 Ft. Over Front	78 Ft. ∡ °	78 Ft. 360°	78 Ft. Over Front	Load Radius (Ft.)
12	77.5	40,300	40,300							12
15	74.5	35,600	35,600	77.5	31,200	31,200				15
20	69.5	29,200	29,200	73.5	25,800	25,800	75.5	22,800	22,800	20
25	64.5	24,100	24,100	69.0	22,100	22,100	71.5	18,400	18,400	25
30	58.5	20,000	20,000	64.5	19,100	19,100	67.5	15,300	15,300	30
35	52.5	15,600	15,600	59.5	15,700	15,700	63.5	13,000	13,000	35
40	45.5	12,400	12,400	54.0	12,500	12,500	59.0	11,700	11,700	40
45	38.0	10,100	10,200	48.5	10,200	10,300	54.5	10,200	10,200	45
50	28.5	8,400	8,500	42.5	8,500	8,600	49.5	8,600	8,600	50
55	12.0	7,000	7,100	35.5	7,100	7,200	44.0	7,200	7,300	55
60				26.5	6,000	6,100	38.0	6,100	6,200	60
65				11.5	5,100	5,200	30.5	5,200	5,300	65
70							21.0	4,500	4,600	70
Min.Bm. Ang./ Cap	0 (55.8)	6,800	6,900	0 (65.8)	5,000	5,100	0 (73.8)	4,000	4,100	Min.Bm Ang./ Cap

Note: Refer To Page 5 For "Capacity Deductions For Auxiliary Load Handling Equipment".
∡° Loaded Boom Angle In Degrees. ( ) Reference Radius For Minimum Boom Angle Capacities (Shown in Parenthesis) Are In Feet.

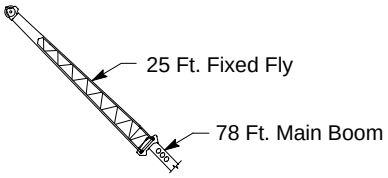

Rated Lifting Capacities In Pounds
Fully Extended Outriggers.
See Set Up Note 2.

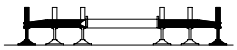

FULL

Load Radius (Ft.)	∡ °	360°	Load Radius (Ft.)
25	77.0	11,700	25
30	74.0	11,200	30
35	71.0	10,400	35
40	68.5	9,700	40
45	65.0	8,500	45
50	62.0	7,500	50
55	58.5	6,700	55
60	55.0	6,000	60
65	51.5	5,400	65
70	47.5	4,900	70
75	43.5	4,400	75
80	38.5	3,900	80
85	33.5	3,400	85
90	27.0	3,000	90
95	19.0	2,700	95
Min.Bm. Ang./Cap.	**0**	**2,400**	**Min.Bm.** Ang./Cap.

Note: Refer To Page 5 For "Capacity Deductions For Auxiliary Load Handling Equipment".
∡° Loaded Boom Angle In Degrees.

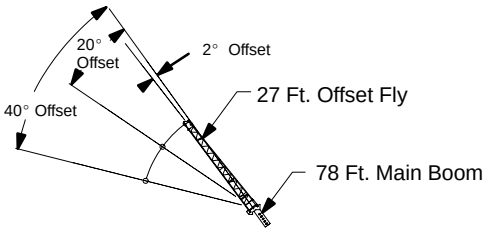

Rated Lifting Capacities In Pounds
Fully Extended Outriggers.
See Set Up Note 2

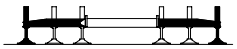

FULL

Load Radius (Ft.)	2° Offset ∡ °	2° Offset 360°	20° Offset ∡ °	20° Offset 360°	40° Offset ∡ °	40° Offset 360°	Load Radius (Ft.)
25	77.0	11,000					25
30	74.5	10,700					30
35	71.5	9,900	75.5	7,100			35
40	69.0	9,200	72.5	6,600	76.5	5,100	40
45	66.0	8,000	70.0	6,200	73.5	4,900	45
50	62.5	7,000	66.5	5,800	70.5	4,700	50
55	59.5	6,200	63.5	5,500	67.0	4,500	55
60	56.0	5,500	60.5	5,200	63.5	4,400	60
65	52.5	4,900	57.0	5,000	60.0	4,300	65
70	48.5	4,400	53.0	4,500	56.0	4,200	70
75	44.5	4,000	49.0	4,100	52.0	4,100	75
80	40.0	3,600	44.5	3,700	47.0	3,800	80
85	35.0	3,100	39.5	3,300	41.5	3,400	85
90	29.5	2,700	33.5	2,800			90
95	22.0	2,400	25.5	2,400			95
100	9.5	2,000					100
Min.Bm. Ang./Cap.	0	2,000	0	2,000	0	2,200	**Min.Bm.** Ang./Cap.

Note: Refer To Page 5 For "Capacity Deductions For Auxiliary Load Handling Equipment".
∡° Loaded Boom Angle In Degrees.

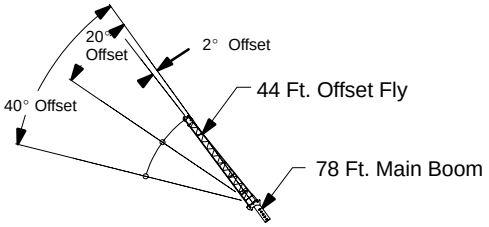

Rated Lifting Capacities In Pounds
Fully Extended Outriggers.
See Set Up Note 2

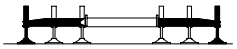

FULL

Load Radius (Ft.)	2° Offset ∡ °	2° Offset 360°	20° Offset ∡ °	20° Offset 360°	40° Offset ∡ °	40° Offset 360°	Load Radius (Ft.)
30	77.0	6,400					30
35	74.5	5,900					35
40	72.5	5,400					40
45	70.0	5,000	76.0	3,600			45
50	67.5	4,600	73.5	3,300			50
55	65.0	4,200	71.0	3,200	76.5	2,500	55
60	62.5	3,900	68.5	3,000	74.0	2,400	60
65	59.5	3,600	65.5	2,800	71.0	2,300	65
70	57.0	3,400	63.0	2,700	68.0	2,200	70
75	54.0	3,200	60.0	2,600	65.0	2,200	75
80	51.0	3,000	57.0	2,400	61.5	2,100	80
85	47.5	2,800	53.5	2,300	58.0	2,100	85
90	44.0	2,500	50.0	2,300	54.0	2,000	90
95	40.0	2,200	46.0	2,200	50.0	2,000	95
100	36.0	2,000	42.0	2,100	45.0	2,000	100
105	31.0	1,800	37.0	1,900	39.0	1,900	105
110	25.5	1,700	30.5	1,700			110
115	17.0	1,500	21.0	1,500			115
Min.Bm. Ang./Cap.	0	1,200	0	1,300	0	1,400	**Min.Bm.** Ang./Cap

Note: Refer To Page 5 For "Capacity Deductions For Auxiliary Load Handling Equipment".
∡° Loaded Boom Angle In Degrees.

WORKING RANGE DIAGRAM

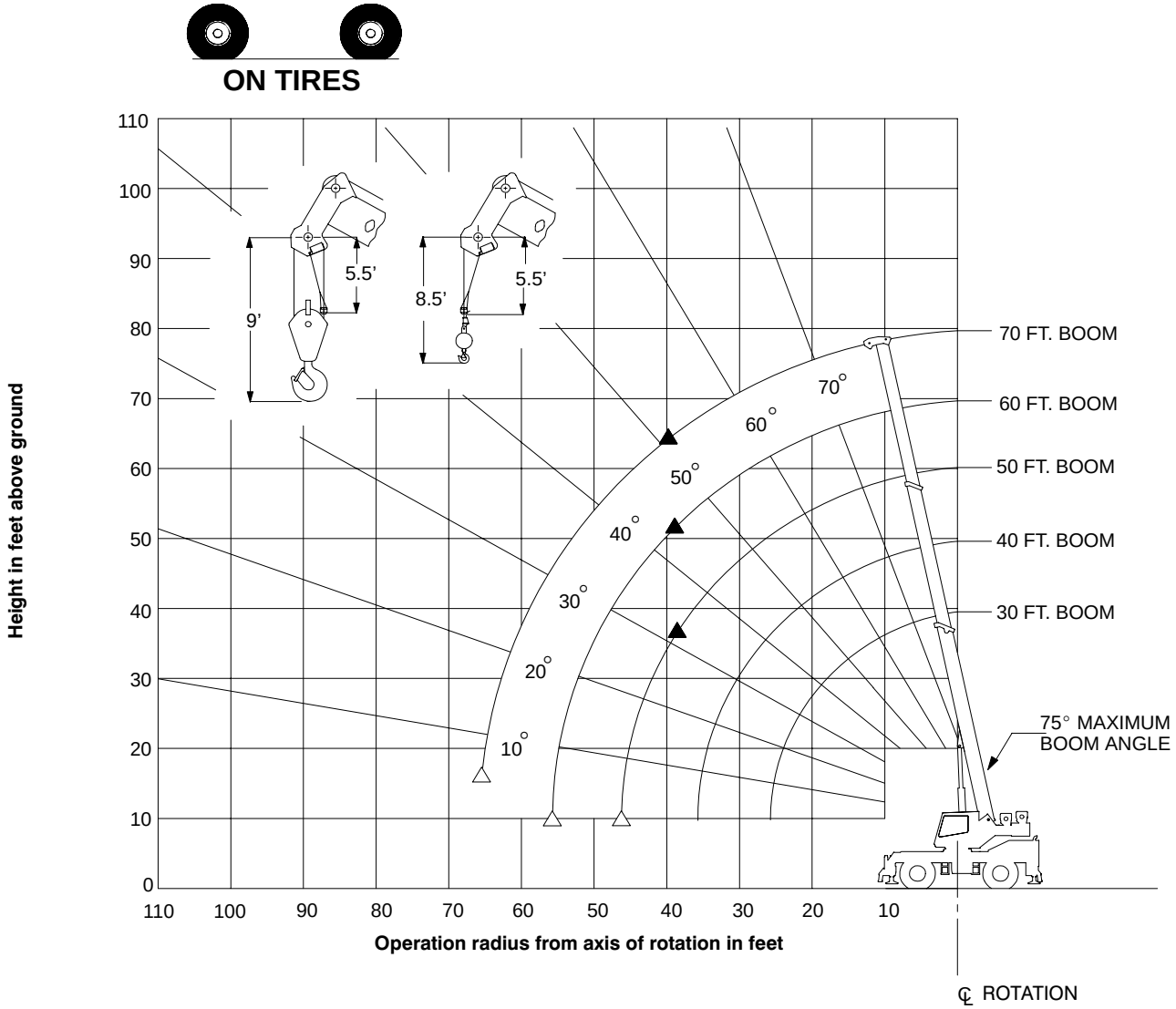

Crane Configurations Prohibited:
- **Boom Lengths Greater than 70 FT.**
- **25 Ft. Fixed Fly**
- **27 Ft. Offset Fly**
- **44 Ft. Offset Fly**

△ **Denotes Main Boom Between Tire Tracks Over Front Or Boom Centered Over Front**
▲ **Denotes Main Boom 360°**

Note: Boom geometry shown is for unloaded condition and crane standing level on firm supporting surface. Boom deflection, subsequent radius and boom angle change must be accounted for when applying load to hook.

⚠ WARNING

Do Not Lower The Boom Below The Minimum Boom Angle For No Load Stability As Shown In The Lift Charts For The Boom Lengths Given. Loss Of Stability Will Occur Causing A Tipping Condition.

On Tire Capacities In Pounds
Tire Pressure: See Page 5
Stationary Capacities
Over Front Between Tire Tracks
See Operation Note 19

ON TIRES

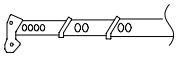

Load Radius (Ft.)	30 Ft. ∡°	30 Ft. Load	40 Ft. ∡°	40 Ft. Load	50 Ft. ∡°	50 Ft. Load	Load Radius (Ft.)
10	65.5	33,000					10
12	61.5	29,200					12
15	54.0	24,600	64.5	25,100			15
20	40.0	16,400	56.0	17,000	64.0	17,200	20
25	17.5	11,000	46.0	11,700	57.0	11,900	25
30			34.5	8,500	49.5	8,800	30
35			14.5	6,300	41.0	6,700	35
40					30.5	5,100	40
45					13.0	4,000	45
Min.Bm. Ang./Cap.	**0** (25.8)	10,400	**0** (35.8)	6,000	**0** (45.8)	3,800	**Min.Bm.** Ang./Cap.

Load Radius (Ft.)	60 Ft. ∡°	60 Ft. Load	70 Ft. ∡°	70 Ft. Load	Load Radius (Ft.)
25	63.5	12,100			25
30	58.0	8,900	63.5	9,000	30
35	51.5	6,900	58.5	7,000	35
40	45.0	5,300	53.5	5,500	40
45	37.5	4,200	48.0	4,300	45
50	28.0	3,300	41.5	3,500	50
55	11.5	2,600	34.5	2,800	55
60			26.0	2,200	60
65			11.0	1,700	65
70					70
Min.Bm. Ang./Cap.	**0** (55.8)	2,500	**5.0** (65.7)		**Min.Bm.** Ang./Cap.

Note: Refer To Page 5 For "Capacity Deductions For Auxiliary Load Handling Equipment".
∡° Loaded Boom Angle In Degrees. ( ) Reference Radius For Minimum Boom Angle Capacities (Shown in Parenthesis) Are In Feet.

On Tire Capacities In Pounds
Tire Pressure: See Page 5
Pick and Carry Capacities
Over Front Between Tire Tracks
See Operation Note 19

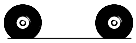

ON TIRES

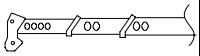

Load Radius (Ft.)	30Ft. ∡°	30Ft. Creep	30Ft. 2.5 mph	40 Ft. ∡°	40 Ft. Creep	40 Ft. 2.5 mph	50 Ft. ∡°	50 Ft. Creep	50 Ft. 2.5 mph	Load Radius (Ft.)
10	65.5	32,500	22,800							10
12	61.0	28,300	19,600							12
15	54.0	23,400	16,000	64.5	23,800	16,400				15
20	40.0	16,400	11,700	56.0	17,000	12,200	64.0	17,200	12,500	20
25	17.5	11,000	8,800	46.0	11,700	9,400	57.0	11,900	9,700	25
30				34.5	8,500	7,300	49.5	8,800	7,600	30
35				14.5	6,300	5,800	41.0	6,700	6,100	35
40							30.5	5,100	4,900	40
45							13.0	4,000	3,900	45
Min.Bm Ang./ Cap.	**0** (25.8)	10,400	8,400	**0** (35.8)	6,000	5,500	**0** (45.8)	3,800	3,700	Min.Bm Ang./ Cap.

Load Radius (Ft.)	60 Ft. ∡°	60 Ft. Creep	60 Ft. 2.5 mph	70 Ft. ∡°	70 Ft. Creep	70 Ft. 2.5 mph	Load Radius (Ft.)
25	63.5	12,100	9,900				25
30	58.0	8,900	7,800	63.5	9,000	8,000	30
35	51.5	6,900	6,300	58.5	7,000	6,400	35
40	45.0	5,300	5,100	53.5	5,500	5,200	40
45	37.5	4,200	4,100	48.0	4,300	4,300	45
50	28.0	3,300	3,300	41.5	3,500	3,500	50
55	11.5	2,600	2,600	34.5	2,800	2,800	55
60				26.0	2,200	2,200	60
65				11.0	1,700	1,700	65
Min.Bm. Ang./Cap.	0 (55.8)	2,500	2,500	5.0 (65.7)			Min.Bm. Ang./Cap.

Note: Refer To Page 5 For "Capacity Deductions For Auxiliary Load Handling Equipment".
∡° Loaded Boom Angle In Degrees. ( ) Reference Radius For Minimum Boom Angle Capacities (Shown in Parenthesis) Are In Feet.

On Tire Capacities In Pounds
Tire Pressure: See Page 5
Stationary Capacities
360 Degrees
See Operation Note 19

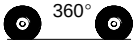

ON TIRES

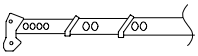

Load Radius (Ft.)	30 Ft. ∡°	30 Ft. Load	40 Ft. ∡°	40 Ft. Load	50 Ft. ∡°	50 Ft. Load	Load Radius (Ft.)
10	65.5	21,900					10
12	61.0	16,200					12
15	54.0	11,100	64.0	11,700			15
20	40.0	6,600	55.5	7,100	63.5	7,400	20
25	17.0	4,000	46.0	4,600	56.5	4,900	25
30			34.0	3,000	49.5	3,300	30
35			14.5	1,900	41.0	2,200	35
Min.Bm. Ang./Cap.	**0** (25.8)	3,700	**0** (35.8)	1,700	**32.0** (39.2)		**Min.Bm.** Ang./Cap.

Load Radius (Ft.)	60 Ft. ∡°	60 Ft. Load	70 Ft. ∡°	70 Ft. Load	Load Radius (Ft.)
25	63.0	5,100			25
30	57.5	3,500	63.0	3,600	30
35	51.5	2,400	58.0	2,500	35
40			53.0	1,700	40
Min.Bm. Ang./Cap.	**44.0** (40.6)		**51.0** (41.8)		**Min.Bm.** Ang./Cap.

⚠ WARNING

Do Not Raise Boom Above 75° Boom Angle. Loss Of Backward Stability Will Occur Causing a Tipping Condition.

Note: Refer To Page 5 For "Capacity Deductions For Auxiliary Load Handling Equipment".
∡° Loaded Boom Angle In Degrees. ( ) Reference Radius For Minimum Boom Angle Capacities (Shown in Parenthesis) Are In Feet.

® Link–Belt is a registered trademark. Copyright 2002. All rights reserved. We are constantly improving our products and therefore reserve the right to change designs and specifications.

■ Axle Loads

Base machine with standard 30 to 78' *(9.14 – 23.78 m)* three–section boom, 2M main winch with 2–speed hoisting and power up/down, 450'. *(137 m)* of 5/8" in. *(19 mm)* wire rope. 4x4x4 carrier with Cummins 6BT5.9 engine, 20.5R25 tires 75 gals. *(283.91 L)* of fuel, tow shackles and hook block tie-back.	G.V.W.[1]		Upper facing front				Upper facing rear			
			Front axle		Rear axle		Front axle		Rear axle	
	lbs.	*kg.*	lbs.	*kg.*	lbs.	*kg.*	lbs.	*kg.*	lbs.	*kg.*
	52,063	*23 615*	25,889	*11 743*	26,174	*11 872*	23,320	*10 578*	28,743	*13 038*
Pintle hook, front and rear	26	*12*	13	*6*	13	*6*	13	*6*	13	*6*
Cold weather starting aids – ether injector	6	*3*	0	*0*	6	*3*	0	*0*	6	*3*
Pump disconnect	28	*13*	6	*3*	21	*10*	6	*3*	21	*10*
Hot water heater in operator's cab	35	*16*	18	*8*	17	*8*	18	*8*	17	*8*
Air conditioning in operator's cab	215	*98*	36	*16*	179	*81*	187	*85*	28	*13*
Emergency steer system	5	*2*	3	*1*	2	*1*	2	*1*	3	*1*
360 degree sector gear–type house lock	60	*27*	29	*13*	31	*14*	33	*15*	27	*12*
Winch roller – rear winch	76	*34*	–14	*–6*	90	*41*	93	*42*	–17	*–8*
Power up/down winch with 450 ft. of rope –front	361	*164*	–28	*–13*	389	*176*	402	*182*	–41	*–19*
Winch roller – front winch	76	*36*	1	*0*	75	*34*	78	*35*	–2	*–1*
Remove 450' *(137 m)* of wire rope from rear winch	–320	*–145*	82	*37*	–402	*–182*	–413	*–187*	94	*43*
Remove 450' *(137 m)* of wire rope from front winch	–320	*–145*	21	*10*	–340	*–154*	–352	*–160*	33	*15*
Replace three–section boom with four section boom	3,428	*1 555*	1,654	*750*	1,774	*805*	1,900	*862*	1528	*693*
30–ton *(27.2 mt)* capacity hook block to carrier storage box	670	*304*	943	*428*	–273	*–124*	–248	*–112*	918	*416*
8.5–ton *(7.7 mt)* capacity hook block to carrier storage box	360	*163*	506	*230*	–146	*–66*	–133	*–60*	493	*225*
Three–Section Boom										
Fly brackets to boom base sections for fly options	140	*64*	213	*97*	–72	*–33*	–67	*–30*	208	*94*
25' *(7.62 m)* fixed fly (stowed)	535	*243*	860	*390*	–325	*–147*	–306	*–139*	841	*381*
27' *(8.23 m)* offset fly (stowed)	1,052	*477*	1793	*813*	–741	*–336*	–703	*–319*	1,755	*796*
27 – 44' *(8.23 – 13.41 m)* offset fly (stowed)	1,475	*669*	2314	*1050*	–839	*–381*	–785	*–356*	2,260	*1025*
Floodlight to boom base section	4	*2*	7	*3*	–3	*–1*	–3	*–1*	7	*3*
Auxiliary lifting sheave	71	*32*	204	*93*	–132	*–60*	–130	*–59*	201	*91*
Four–Section Boom										
Fly brackets to boom base sections for fly options	140	*64*	200	*91*	–60	*–27*	–55	*–25*	195	*88*
25' *(7.62 m)* fixed fly (stowed)	535	*243*	813	*369*	–278	*–126*	–259	*–117*	794	*360*
27' *(8.23 m)* offset fly (stowed)	1,052	*477*	1701	*772*	–649	*–294*	–611	*–277*	1,663	*754*
27 – 44' *(8.23 – 13.41 m)* offset fly (stowed)	1,475	*669*	2184	*991*	–710	*–322*	–656	*–298*	2,131	*967*
Floodlight to boom base section	4	*2*	7	*3*	–3	*–1*	–3	*–1*	7	*3*
Auxiliary lifting sheave	71	*32*	197	*82*	–126	*–57*	–124	*–56*	195	*88*

[1] – Adjust gross weight and axle loading according to component weight. Note: All weights are ± 3%.

®Link–Belt is a registered trademark. Copyright 2000. All rights reserved.
We are constantly improving our products and therefore reserve the right to change designs and specifications.